PULSAR™ R05

R05 software V2.0a

Installation and Operating Manual

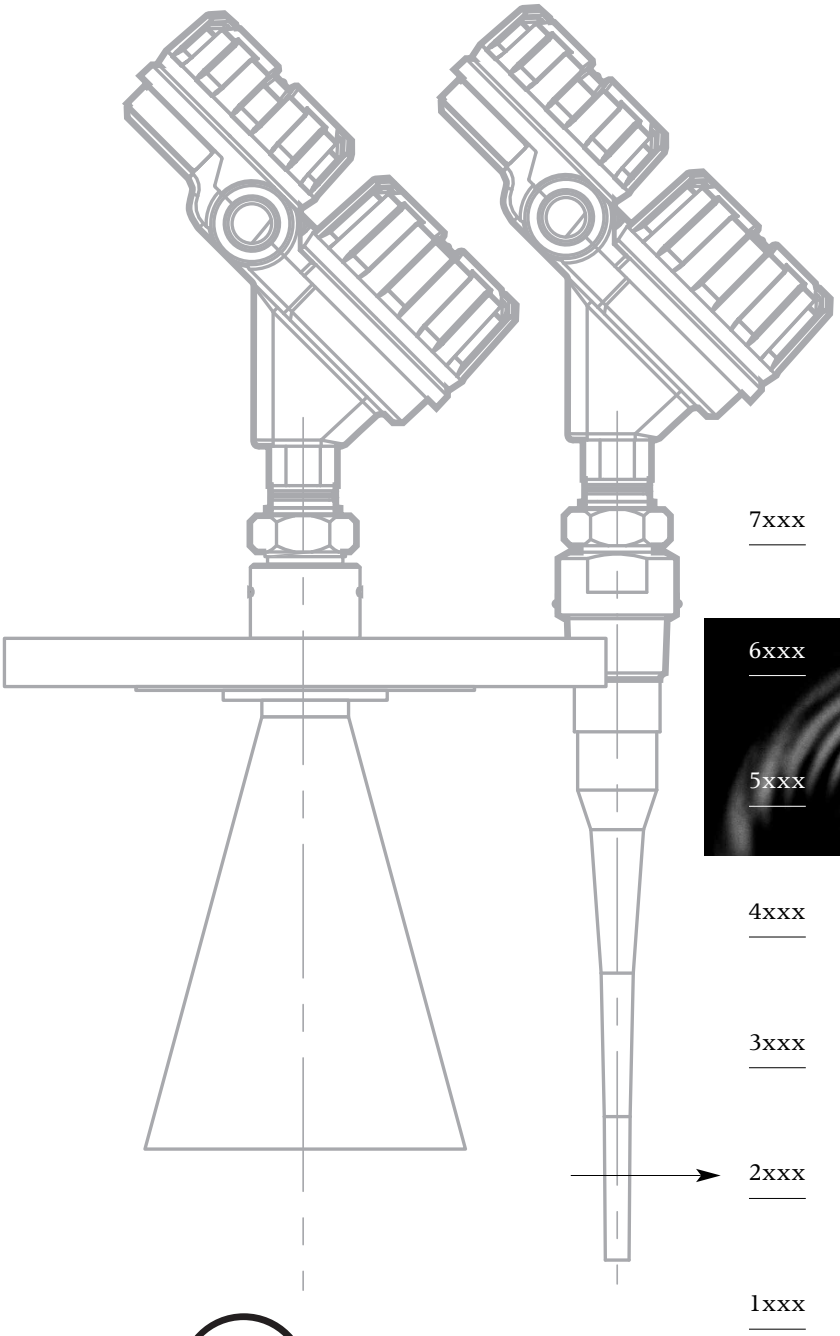

Pulse Burst

Radar-based

Level

Measurement

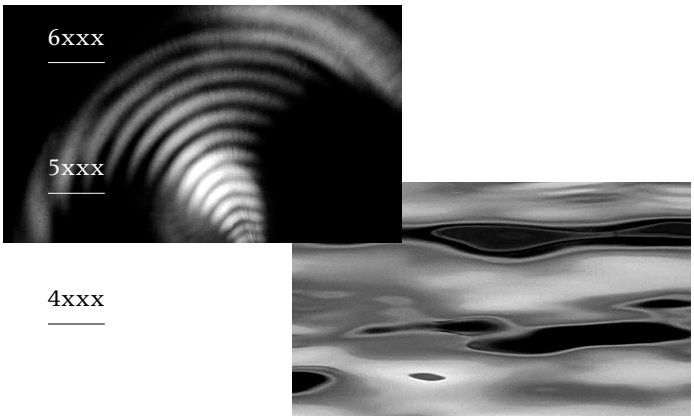

Magnetrol®

UNPACKING

Unpack the instrument carefully. Make sure all components have been removed from the foam protection. Inspect all components for damage. Report any concealed damage to the carrier within 24 hours. Check the contents of the carton/crates against the packing slip and report any discrepancies to Magnetrol. Check the nameplate model number (Model number/approvals as per inserted separate sheet) to be sure it agrees with the packing slip and purchase order. Check and record the serial number for future reference when ordering parts.

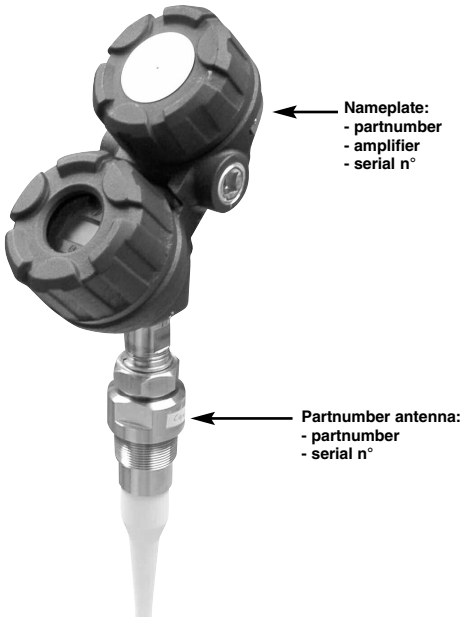

CE 0038 0344

These units are in conformity with the provisions of:

1. The EMC Directive: 89/336/EEC. The units have been tested to EN 61326.
2. Directive 94/9/EC for Equipment or protective system for use in potentially explosive atmospheres. EC-type examination certificate number KEMA03ATEX1447X (intrinsic safe units) or KEMA02ATEX2256X (EEx d units).
3. The PED directive 97/23/EC (pressure equipment directive). Safety accessories per category IV module H1.
4. The RTTE Directive 99/5/EC.

Special conditions for ATEX Intrinsically safe use:
Materials marked as Category 1 equipment and used in hazardous areas requiring this category, shall be installed in such a way that, even in the event of rare incidents, the aluminium enclosure cannot be an ignition source due to impact or friction.

MOUNTING

Location

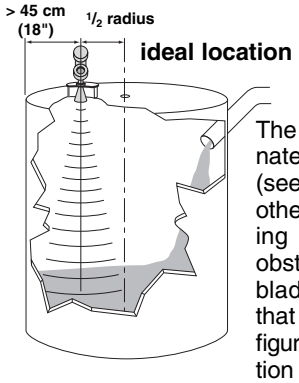

The beam pattern, should illuminate the maximum liquid surface (see table) with a minimum striking other objects in the vessel including the tank wall. Unavoidable obstacles (eg. ladders / mixing blades) will produce reflections that can be minimized during configuration – see Menu – Target rejection «Targets» & «Targ Rej».

CAUTION: when an insulated probe is used in a potentially explosive atmosphere caused by gas, damp or a non-conducting liquid, precautions must be taken to avoid ignition due to hazardous electrostatic charges.

Beam Angle

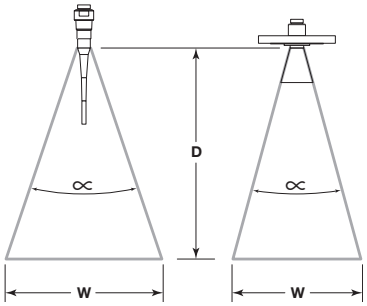

	Beam Spread, W @-3dB; m (ft)		
Antenna Beam Angle (∝)	Dielectric Rod 25°	4" Horn 25°	6" Horn 17°
Distance, D			
3 (10)	1.40 (4.5)	1.40 (4.5)	0.90 (3.0)
6 (20)	2.70 (8.9)	2.70 (8.9)	1.80 (6.0)
9 (30)	4.10 (13.3)	4.10 (13.3)	2.70 (9.0)
12 (40)	5.40 (17.8)	5.40 (17.8)	3.70 (12.0)
15 (50)	6.80 (22.2)	6.80 (22.2)	4.60 (15.0)
18 (60)	8.10 (26.6)	8.10 (26.6)	5.50 (18.0)
20 (65)	8.80 (28.9)	8.80 (28.9)	6.00 (19.5)

Insulation

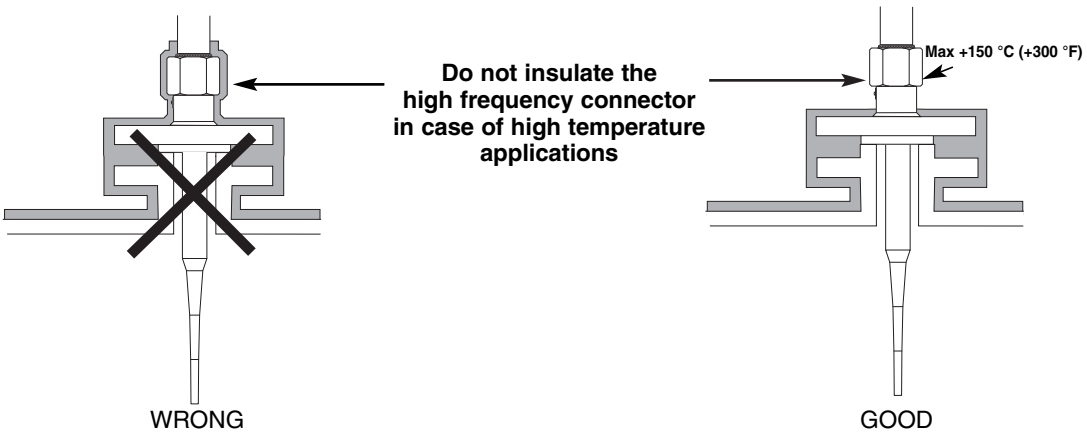

Obstructions

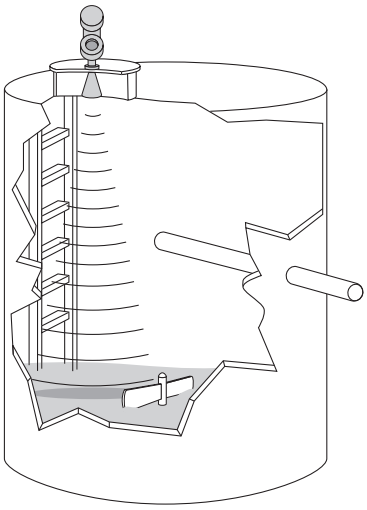

Note: Minimize false target reflections by:
- proper installation (see location / beam angle)
- proper orientation (see below)

Nozzles

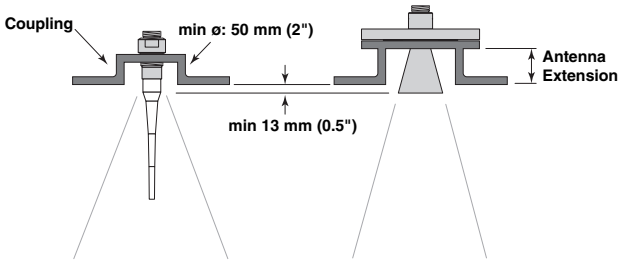

Note: Improper installation in a nozzle creates "ringing". Select an extended antenna (see below) if the active part is not a minimum of 13 mm (0.5") outside the nozzle (see above).

Standpipes and Stillwells

Pulsar can be mounted into a standpipe or stillwell but specific considerations should be given:

Considerations for the standpipe or stillwell:

- Only use in metal stillwells/standpipes: min 80 mm – max 200 mm Ø (3 – 8")
- Venting holes and slots should not be larger than 13 mm (0.5)
- Smooth welds, no reducers allowed, and the length of the stillwell/standpipe = the measuring length (liquid must be at all times in the stillwell/standpipe)
- When isolation valves are used, use a full port valve of the same diam. of the standpipe diam.
- When the stillwell is near to the bottom and ε_r is low (1.7 ..3.0), use a deflector plate to eliminate tank bottom reflections

Considerations for the unit:

- Only use horn antenna sized to the pipe dia.
  - 3" antenna for pipe sizes DN 80 / 3"
  - 4" antenna for pipe sizes DN 100 up to 150 / 4" up to 6"
  - 6" antenna for pipe sizes DN 200 / 8" and above
- Rotate unit until index is in 90° versus process connection
- Enter the inside pipe Ø in the menu screen «pipe ID». The installation into a pipe increases the systems' sensitivity. Entering a pipe inside diameter reduces the gain which automatically compensates for this.

Apply the following table to determine max measuring range

Antenna size	Pipe size sch 40 - wall thickness of 5 mm (0.19")		max range in meters (ft)
3"	DN 80	3"	18,3 (60.0)
4"	DN 100	4"	19,1 (62.7)
		6"	19.6 (64.3)
6"	DN 150 DN 200	8"	19.8 (65.0)

Pipe inside diameters are within range for pipe sizes up to sch 40 or wall thickness of 5 mm (EN/DIN).

For larger pipe sizes, use above pipe sizes as a max inside diameter regardless outside diameter.

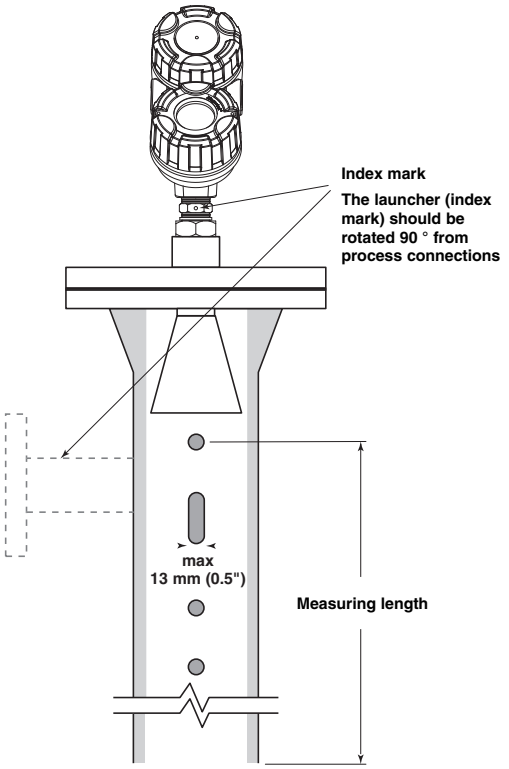

CAUTION: first orientate the transmitter launcher for optimal performance before tightening the universal connector and the locking nut on the housing base. Always run the Target Rejection routine – see menu configuration – after changing menu selections or launcher orientation.

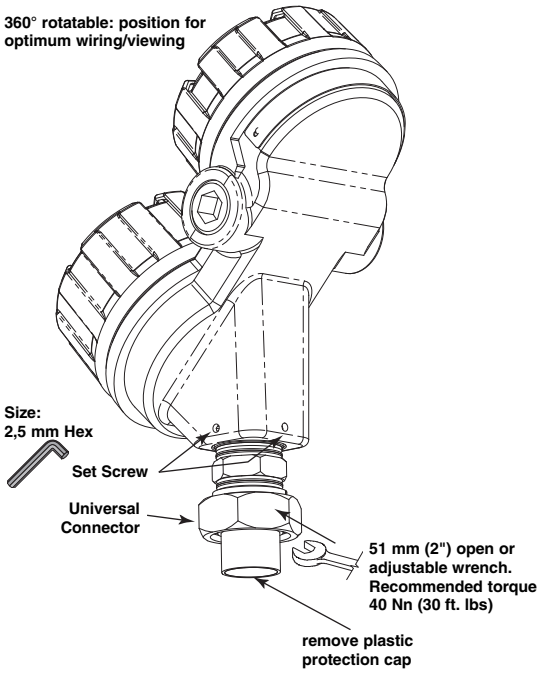

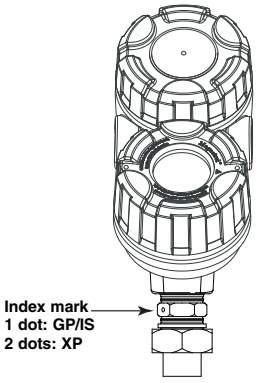

The index mark is present for reference. The launcher is considered to be at 0° when the index mark is closest to the tank wall.

The mark can either be 1 or 2 dots. The dots refer to the type of adapter piece being used (1 dot = GP/IS; 2 dots = Xp).

The Pulsar transmitter utilizes a linearly polarized, microwave beam that can be rotated to improve its performance. Proper orientation can minimize unwanted target reflections, decrease sidewall reflections (multipath) and maximize direct reflections from the liquid surface.

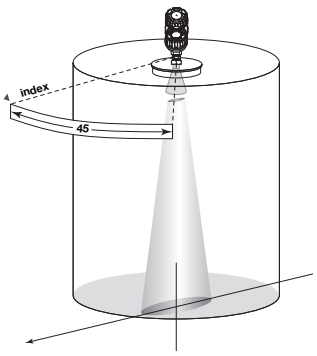

Polarization pattern

The index mark located on the side of the launcher are oriented in the same direction as the polarization.

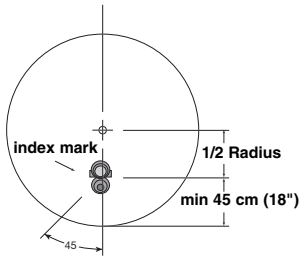

Top view mounted 1/2 radius

Ideally, the transmitter should be mounted half the radius from the tank wall. Align the index mark so they are at an angle of 45° to a line from the radar unit to the nearest tank wall. A transmitter mounted within 45 cm (18") of a tank wall may demand orientation adjustments to limit multipath and optimize performance.

Signal is lost at a specific level:

1. bring level to this point: «`Qual`» screen displays the lowest value – see Menu configuration.
2. Loosen both locking nut and the universal connector without removing electronics.
3. Rotate the launcher 10-20°.
4. Allow the unit to stabilize for ± 1 min.
5. Repeat untill «`Qual`» reads the optimum value.
6. Tighten both lock nut / universal connector without disturbing the position of the launcher.

WIRING

CAUTION: power must be switched OFF before wiring the unit.

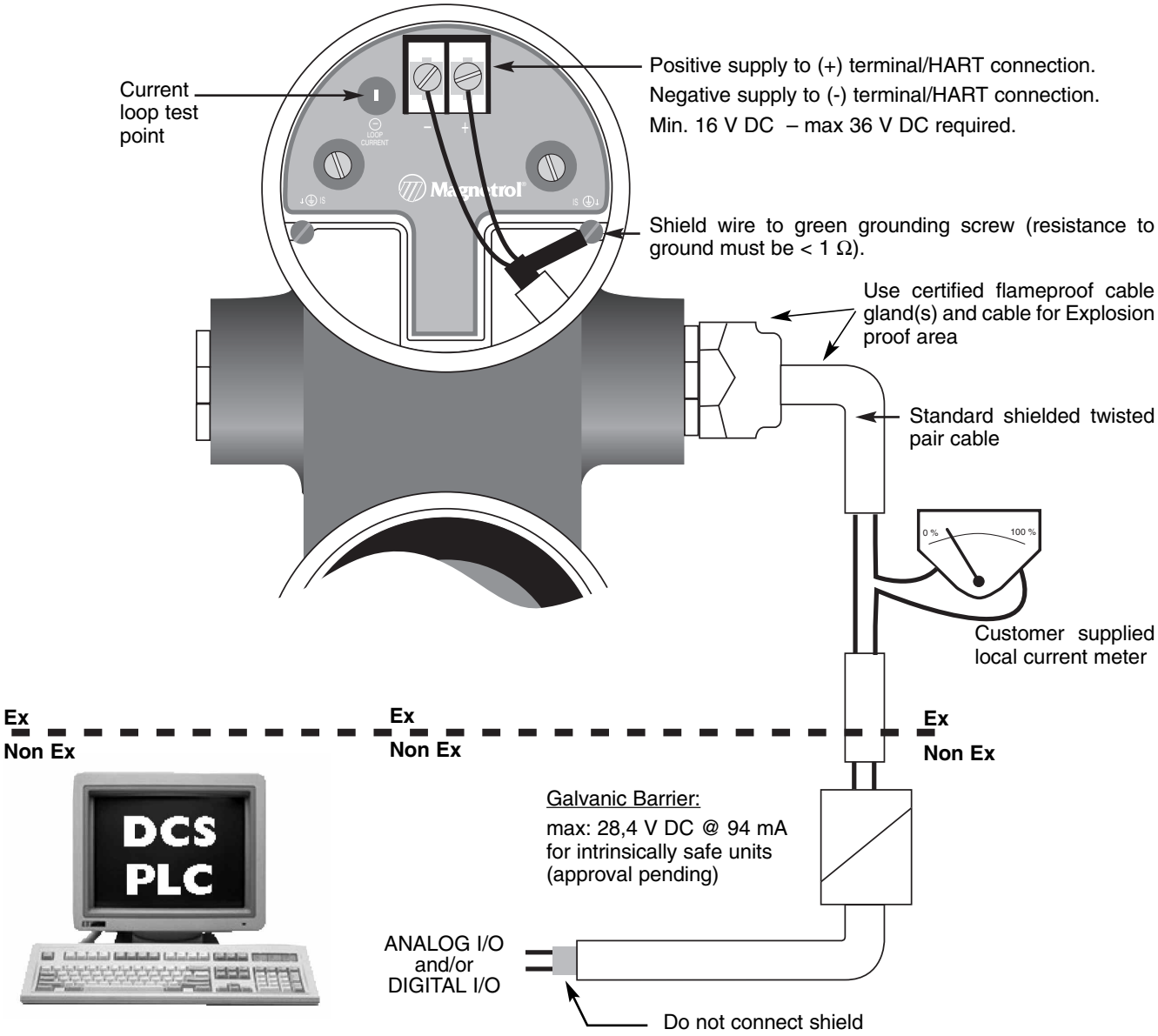

TECHNOLOGY

Pulsar™ Pulse Burst Radar emits short bursts of 5.8 GHz (Europe) or 6.3 GHz (North America) energy to a liquid surface. An ultra-high-speed timing circuitry measures the time of the signal reflected off the liquid surface.

Sophisticated signal processing filters out false reflections and other background noises. The exact level is then calculated, by factoring tank height and sensor offset information. The Pulsar® circuitry is extremely energy efficient so no duty cycling is needed like with likewise radars. This allows to track high rates of level changes up to 4,5 m/minute (180"/min).

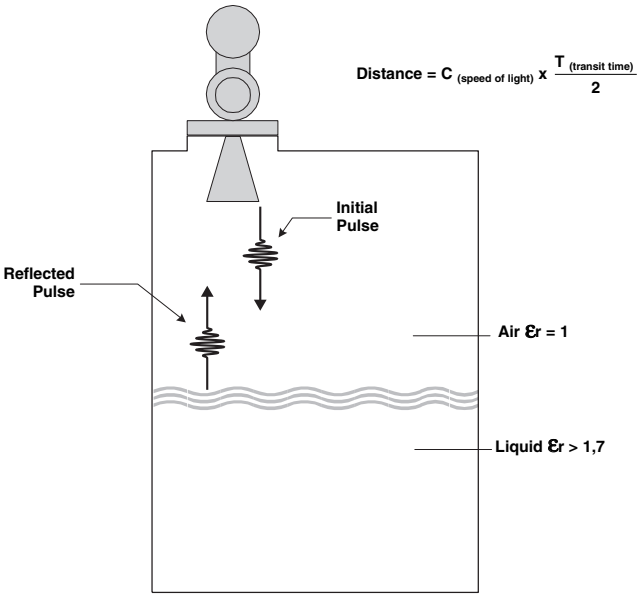

CONFIGURATION

TERMINOLOGY

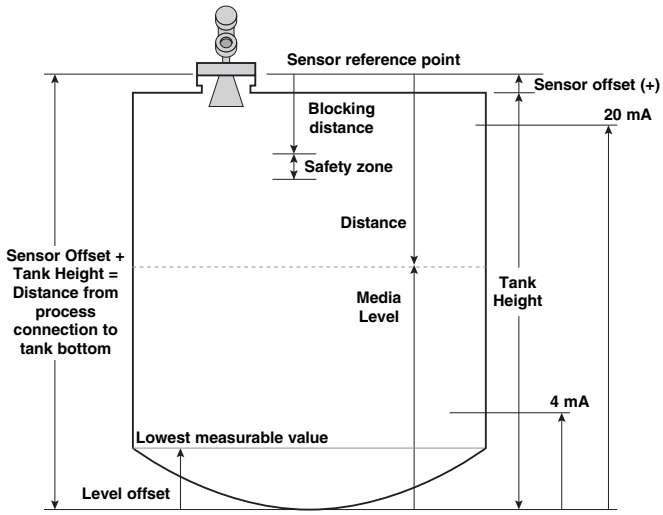

The Pulsar® can measure reliably in the **measurement zone**, although that the **max 100 %** and **min 0 %** level read outs can be respectively above and below this measurement zone. The **sensor reference point** (bottom of NPT thread, top of BSP or face of flange) defines from where all configuration dimensions are entered. The value in **sensor offset** accommodates for the distance between tank height and effective process connection. By entering a **level offset**, the user can set the 0 % at the bottom of the tank in spite of an irregular bottom, heating coils etc.. Offset values are practical in use for configuring the unit based upon tank details that are available. When level approaches the **blocking distance** – this is the zone in which unreliable measurement can be expected from antenna ringing – the user can set a safety zone. When level enters the **safety zone**, an error signal (3.6 mA / 22 mA) will alarm for high level readings in critical level applications. The user can also select for **latch 3.6 mA** or **latch 22 mA**, in this case the loop current will remain blocked until manually cleared.

CONFIGURATION

NOTE: When connected to an approved barrier, the intrinsically safe electronics of the Pulsar allow to remove the covers with power switched on – even if the area is known to be hazardous.

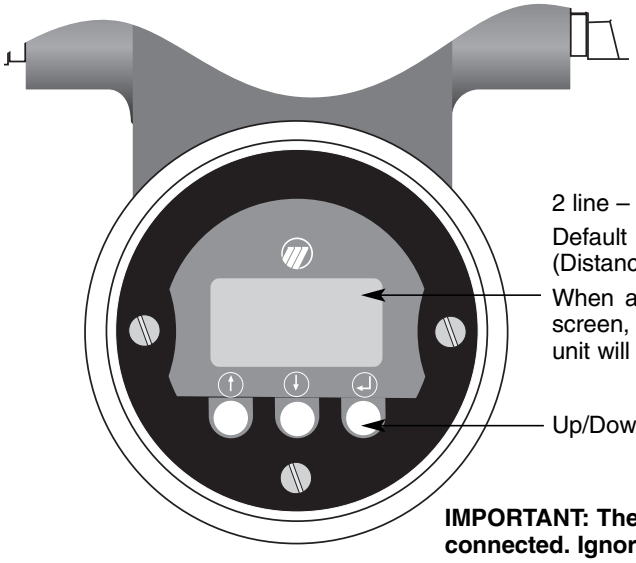

2 line – 8 characters LCD

Default display cycles every 5 s through «LEVEL» (Level) / «Distance» (Distance) / «Qual» (Quality) / «% OUTPUT» (% output) / «LOOP» (Loop)

When any of these screens is selected, the display will freeze on this screen, when any other configuration/diagnostic screen is displayed, the unit will revert after minutes to the scrolling display screens.

Up/Down and Enter pushbuttons

IMPORTANT: The Pulsar amplifier can be bench configured without antenna connected. Ignore the start up message in this case, or any level reading.

Display	Comment	
Units! cm	Press ↵:	The last character on the first line of the display changes to «!». This sign confirms that the values/choices of the second line can be modified via the ↓ and ↑ push buttons.
Units! **cm**	Press ↑↓	* Scroll through the choices or increase/decrease the values on the second line of the display by ↓ and ↑ pushbuttons. * Accept values/choices as selected by ↵ pushbutton.
Units cm	Press ↑↓	Scroll through the menu.

PASSWORD

Display	Action	Comment
Changing/Disabling Password (Disabled password = «0» – factory default value)		
New Pass 4096①	Toggle with ↓ and ↑ until screen «New Pass» appears, press ↵	Changing/disabling password
Ent Pass 0	Enter old password with ↓ and ↑ and press ↵	Menu is activated and password can be modified
Ent Pass! 1	Enter new password to desired value (between 1-255) with ↓ and ↑ or enter value "0" to disable the password function	Changing or disabling password is activated

New password is accepted or disabled.

① encrypted value, can be any value, when a password was activated.

MENU: STEP BY STEP PROCEDURE

NOTE: The Pulsar is pre-configured from factory in the language indicated during the ordering process – if for any reason the configured language does not correspond to your needs – change before proceeding to the required language in «Language» item 39 in below menu. Push 3 x ↑ from the scrolling default display (item 1) to get the «Language» screen.

		Screen	Action	Comment
Run mode	1	*Level* *Distance* *Qual* *%Output* *Loop*	Transmitter Display	Transmitter default display. «Level» (Level) «Distance» (Distance), «Qual» (Quality), «%Output» (% Output), and «Loop» (Loop) values cycle every 5 seconds.
		Screen changes into «No False Targ Rej» if target rejection is disabled.		
	2	Level xxx.x cm	Transmitter Display	Transmitter displays Level measurement in cm, meters inches, or feet.
	3	Distance xxx.x cm	Transmitter Display	Transmitter displays distance in cm or inches – measured from the sensor reference point (top of BSP thread / bottom of NPT thread or face flange connection).
	4	Qual xxx.x	Transmitter Display	Transmitter shows values in between 20 and 90. This encrypted value represents the quality of the reflected signal: 20 = poor / xx = acceptable / 90 = high.
	5	%Output xx.x %	Transmitter Display	Transmitter displays % Output measurement derived from 20 mA span.
	6	Loop xx.xx mA	Transmitter Display	Transmitter displays Loop measurement (mA).
Configuration	7	Units (select)	**Select** units for level measurement readout	cm «cm», meters «meters», inches «inches» or feet «feet».
	8	AntnaTyp (select)	Antenna type	Select as per the **4 first digits** of the partnumber (see nameplate antenna): **xxx-x**xxx-xxx/xxx-xxxx-xxx e.g. «RAA-AXXX»: TFE rod with SST mounting nut.
	9	AntnaExt (select)	Antenna extension (only shows up when «AntnaTyp» was entered)	Select as per **3 last digits** of the partnumber (see nameplate antenna): xxx-xxxx-**xxx**/xxx-xxxx-xxx «-0xx»: 25 mm (1") «-1xx»: 100 mm (4") «-2xx»: 200 mm (8") «-3xx»: 300 mm (12")
	10	AntnaMnt (select)	Antenna mounting	Select «NPT» (NPT), «Flange» (Flange) or «BSP» (BSP).
	11	SnsrOfst xx.x units	Sensor Offset	Enter Sensor Offset in cm, meters, inches or feet (see Terminology - page 6).
	12	Tank Top (select)	Shape/Type of tank top	Select: «Dome»: Dome shaped roof «HorizCyl»: Horizontal and cylindric tank shape «Flat»: Flat roof «Other»: For non-metallic tanks «Irregulr»: Irregular shaped tank
	13	Tank Ht xxx.x units	Tank Height	Enter Tank Height height in cm, meters, inches or feet (see Terminology - page 6).
	14	Block Dis xxx.x units	Blocking Distance	Enter Blocking distance in cm, meters, inches or feet (see Terminology - page 6).

Configuration

	Screen	Action	Comment
15	LevlOfst xxx.x units	Level Offset	Enter Level offset in cm, meters, inches or feet (see Terminology - page 6).
16	Dielctrc (select)	**Enter** the dielectric range value of the media	Select «1,7-3,0»; «3-10» or «10-100».
17	Turbulnc (select)	Select the amount of turbulence	Select: «None» (None), «Light» (Light), «Medium» (Medium) or «Heavy» Heavy.
18	RateChng (select)	Select fill/drain rate	Select: «< 13 cm», «13-50 cm», «50-150 cm» or «> 150 cm» – shown as per selected units/minute; cm or inches.
19	Foam (select)	Select amount of foam	Select: «None» (None), «Light» (Light), «Medium» (Medium) or «Heavy» Heavy - Increase choice if Quality value is < 20
20	Targets	Press to view all targets (incl. targets other than level) Quality signal amplitude < 10: too weak 20-90: typical > 90: too strong	Display message is eg. «1 Lvl 25.8» «Qual 23» = unit sees level 1, level is 25.8 cm and quality of returned echo is 23 – if the level is close to actual and quality displays a value > 20, it is probably correct. Scroll down to view the next levels/targets. Change from Level to Distance reading via the sub menu: «Mode» select either: «Level» (Level) or «Distance» Distance, select «Escape» (Escape) to exit.
21	Targ Rej (status)	Select «Partial» or «Empty»: allows to start False Target procedure «Disable»: False Target Rejection can be suspended for troubleshooting purposes After routine, unit will display the Target Rejection status «Enabled»	Do not proceed untill the proper level with proper quality value is verified in «Targets». Ideally start the procedure in «Partial» when the level is as low as possible. **Procedure:** If under either «empty» or «Partial» «Sure?» «No» is selected – no data will be stored. **«Empty»: vessel is completely empty,** select «Sure?» «yes» Target Rejection starts automatically and will display «Measurng» «Yes» and «Saving» «Yes» whilst the false targets are located and memorized or **«Partial»: vessel cannot be emptied and is partially filled,** unit displays various level targets eg. «2 Lvl 13 186.4 cm» (second target/signal, quality of 13 at a distance/level of 186,4 cm)– press down to view next levels until the screen displays «Entr Lvl xx,x cm», Select and enter the correct level. Select «Sure?» «Yes» and «Saving» «Yes» whilst the false targets are located and memorized. **Notes:** - It is recommended, to re-run routine at a lower level when False Target Rejection was performed via «Partial» at a relatively high level. «Level Too High» message indicates level is too close to antenna to run this routine. - Re-run the complete procedure if one of the following menu selections changed: «AntnaTyp», «AntnaMnt», «SnsrOfst», «Tank Ht», «Block Dis», «Dielctrc», «Turbulnc», «RateChang», «Foam» or when launcher is repositioned.
22	Set 4 mA xxx.x units	Enter the level value for the 4 mA	In run mode: mA value in "Level Offset" area (see Terminology – page 6) will not be displayed
23	Set 20 mA xxx.x units	Enter the level value for the 20 mA	In run mode: mA value in "Blocking Distance" area (see Terminology – page 6) will not be displayed
24	Damping xx	Enter the damping factor	A Damping factor (1-45 seconds) may be added to smooth a noisy display and/or output due to turbulence.
25	SysFault (select)	Select the fault signal	Select «3.6 mA», «22 mA» or «Hold» (Hold last value) see Error Messages page 14.
26	LOEFault (select)	Select Loss of Echo fault	Select «3.6 mA», «22 mA» or «Hold» (Hold last value) see Error Messages page 14.
27	LOEDelay (xxx sec)	Select Loss of Echo delay	Enter a time in between «0» and «255» seconds; 30 seconds is factory default setting.

	Screen	Action	Comment
Configuration	28 SZ Fault (select)	Select the safety zone fault	Select «None» (None), «3.6mA», «22mA», «Latch 3.6mA» or «Latch 22mA». When either «Latch 3.6 / 22mA» signals is selected, the loop current remains in alarm until it is manually cleared with the «SZAlarm» screen (for safety zone explanation see Terminology - page 6).
	29 SZHeight xx.x units	Select the safety zone value	Enter safety zone in cm or inches (see Terminology - page 6).
	30 SZ Alarm Reset	Reset safety zone latch fault	Select «Reset» «No» or «Yes» to reset alam when either «Latch 3.6mA» or «Latch 22mA» was selected in «SZFault».
	31 Poll Adr (xx)	**Enter** HART ID number	**Select** a HART poll address (0-15). Enter 0 for a single transmitter installation.
	32 Trim 4	Fine tune the 4 mA point	**Attach** a mA meter to the output. If the output does not equal 4.0 mA, adjust the value on the display to equal 4.00 mA.
	33 Trim 20	Fine tune the 20 mA point	**Attach** a mA meter to the output. If the output does not equal 20.0 mA, adjust the value on the display to equal 20.00 mA.
	34 Trim Lvl xxx.x units	**Enter** the difference in level value	The unit may measure with a fixed deviation – level trim allows to compensate out for this difference.
	35 Pipe ID xx.x units	**Enter** pipe inside diameter (I.D.)	Enter a value from 40 to 500 mm (3" to 20") for units mounted in a standpipe/stillwell. Enter "0" for units not mounted in a standpipe/stillwell.
	36 Loop Tst xx.xx mA	**Enter** a mA Output value	Set mA Output to any given value to perform loop test.
	37 New Pass xxx	**Enter** new password	Use arrows to select desired value. Values between 0 and 255.
	38 Status	Review status information	Displays the most recent diagnostic events.
	39 Language	Select language	Select «English», «Français», «Deutsch» or «Espagnol».
	40 Model Rx5 Ver xx.xx	Revision information	Software revision DD (Device Descriptor) revision – Hart® units only.
	41 Disp Fact	Review factory parameters	See page 11. Some screens can be consulted for troubleshooting, other screens are protected by a factory password.

NOTE: Clear all diagnostic values upon completion of configuration – See screen 42 page 11.
It is encouraged that all set up information be recorded for future use. See page 23.

Diagnostics

	Screen	Action	Comment
41	Disp Fact	Review Factory parameters	Select «YES» to reveal Factory parameters; «NO» to hide
42	Diagnost	Review Diagnostic messages	A cumulative review of all diagnostic messages Press the enter button twice to clear
43	TrgRjLvl	Review Target Rejection Level	Shows where the last target rejection routine was run
44	Launcher	None, do not adjust	Diagnostic, factory setting
45	Fact Cal	None, do not adjust	Diagnostic, factory setting
46	Peaks	None, do not adjust	Diagnostic, factory setting
47	Algorithm	None, do not adjust	Diagnostic, factory setting
48	Range	None, do not adjust	Diagnostic, factory setting
49	TVG Type	None, do not adjust	Diagnostic, factory setting
50	TVG Max	None, do not adjust	Diagnostic, factory setting
51	Fid Pos	None, do not adjust	Diagnostic, factory setting
52	Fid Gain	None, do not adjust	Diagnostic, factory setting
53	Sys Gain	None, do not adjust	Diagnostic, factory setting
54	Conversion Factor	None, do not adjust	Diagnostic, factory setting
55	Cef dm/s	None, do not adjust	Diagnostic, factory setting
56	Scale Offset	None, do not adjust	Diagnostic, factory setting
57	Distance Correction	None, do not adjust	Diagnostic, factory setting
58	Echo Amp	None, do not adjust	Diagnostic, factory setting
59	#Run Average	None, do not adjust	Diagnostic, factory setting
60	Adaptive Filter	None, do not adjust	Diagnostic, factory setting
61	#Adap Average	None, do not adjust	Diagnostic, factory setting
62	Scatter High	None, do not adjust	Diagnostic, factory setting
63	Rate High	None, do not adjust	Diagnostic, factory setting
64	Scatter Rate	None, do not adjust	Diagnostic, factory setting
65	Peak Detect Reference	None, do not adjust	Diagnostic, factory setting
66	Peak Detect Threshold	None, do not adjust	Diagnostic, factory setting
67	Minimum Threshold	None, do not adjust	Diagnostic, factory setting
68	ROC/min	None, do not adjust	Diagnostic, factory setting
69	Max Rate	None, do not adjust	Diagnostic, factory setting
70	Max dD	None, do not adjust	Diagnostic, factory setting
71	SZ Hysteresis	None, do not adjust	Diagnostic, factory setting
72	ES Delay	None, do not adjust	Diagnostic, factory setting
73	DataLog	None, do not adjust	Diagnostic, factory setting

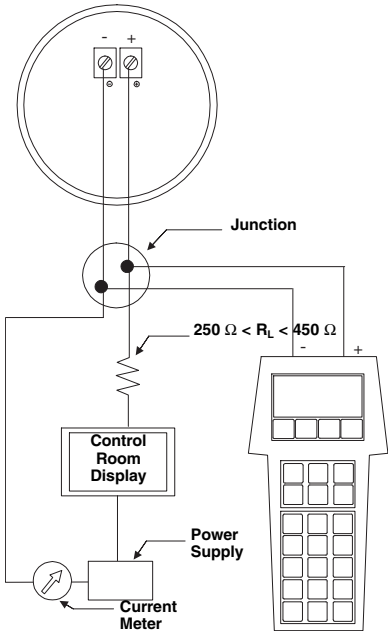

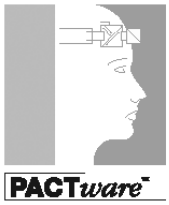

For easy PACT*ware* set up, consult instruction manual 59-600

CONNECTIONS

Connection of your Hart communicator:
- at power terminals (+) and (-) in wiring compartment
- at first junction box between unit and control room.

IMPORTANT: The digital HART® communication is superimposed on the 4-20 mA loop and requires a min. load resistance of 250 Ω and a max load resistance of 450 Ω.

CHECK HART®

Before starting the HART® configuration procedure – check if your HART® communicator (Rosemount Model 275) is equipped with the proper Pulsar Device Descriptors (DD's).

I/O	start up the communicator
Select «NO»:	go offline
Select 4:	utility
Select 5:	simulation
Check manufacturer:	Magnetrol

HART Version	HCF Release Date	Compatible with R05 Software
Dev V2 DD V1	July 2003	Version 1.1a through 1.2e
Dev V4 DD V1	July 2004	Version 2.x

When the proper software version is not found, consult your local HART® Service Center to load the correct Pulsar DD's.

HART MENU

I/O Start up the device

1 Enter «DEVICE SET UP» (Device Set Up)
Press one of the following alphanumeric keys (if no key is sensed after 5 s, the unit will automatically jump to RUN mode).

1 for entering «CALIBRATION» (Calibration) (see page 13 for additional information)
2 for entering «BASIC SET UP» (Basic Set Up) – general HART
3 for «ADVANCED SET UP» (Advanced Set Up) (see page 13 for additional information)
4 for entering «DIAGNOSTICS» (Diagnostics) (see page 13 for additional information)
5 for entering «REVIEW» (Review) to review all settings.

Model R05 1.X

- 1 Device Setup
  - 1 Calibration
    - 1 Tag
    - 2 Antenna Type
    - 3 Antenna Extension
    - 4 Antenna Mount
    - 5 Sensor Offset
    - 6 Tank Top
    - 7 Tank Height
    - 8 Blocking Distance
    - 9 Level Offset
    - 10 Dielectric
    - 11 Turbulence
    - 12 Rate of Change
    - 13 Foam
    - 14 Targets
    - 15 Target Rejection
    - 16 4 mA Set Point
    - 17 20 mA Set Point
    - 18 Damping
    - 19 System Fault State
    - 20 LOE Fault State
    - 21 LOE Delay
    - 22 SZ Fault State
    - 23 SZ Height
    - 24 SZ Alarm Reset
    - 25 Trim Level
    - 26 Pipe ID
    - 27 Date/Time/Initials
  - 2 Basic Setup
    - 1 Tag
    - 2 Descriptor
    - 3 Date
    - 4 Message
    - 5 Poll addr
    - 6 Final Asmbly Num
  - 3 Advanced Setup
    - 1 Trim Loop Current
    - 2 Enter Password
    - 3 Factory Settings
      - 1 Launcher
      - 2 Algorithm
      - 3 Range
      - 4 TVG Type
      - 5 TVG Max
      - 6 Fiducial Position
      - 7 Fiducial Gain
      - 8 System Gain
      - 9 Conversion Factor
      - 10 CF #Run Average
      - 11 Ceff
      - 12 Scale Offset
      - 13 Distance Corr
      - 14 #Run Average
      - 15 Adaptive Filter
      - 16 #Adaptive Average
      - 17 Scatter High Limit
      - 18 Rate High Limit
      - 19 Peak Detect Ref
      - 20 Peak Detect Thresh
      - 21 Min Threshold
      - 22 Max Rate
      - 23 Max Delta Distance
      - 24 SZ Hysteresis
      - 25 ES Delay
      - 26 DataLog
      - 27 FactPar1
      - 28 FactPar2
    - 4 Magnetrol S/N
    - 5 New User Password
    - 6 Device ID
  - 4 Diagnostics
    - 1 Loop Test
    - 2 Echo Amplitude
    - 3 Peaks
    - 4 Status
    - 5 Diagnostic Info
    - 6 Targ Rej Level
    - 7 Scatter
    - 8 Rate
    - 9 ROC per Minute
  - 5 Review
    - 1 Model
    - 2 Manufacturer
    - 3 Magnetrol, S/N
    - 4 Firmware Version
    - 5 Coprocessor Version
    - 6 Tag
    - 7 Descriptor
    - 8 Date
    - 9 Message
    - 10 Final Asmbly Num
    - 11 Device ID
    - 12 Poll Address
    - 13 Units
    - 14 Antenna Type
    - 15 Antenna Extension
    - 16 Antenna Mount
    - 17 Sensor Offset
    - 18 Tank Top
    - 19 Tank Height
    - 20 Blocking Distance
    - 21 Level Offset
    - 22 Dielectric
    - 23 Turbulence
    - 24 Rate of Change
    - 25 Foam
    - 26 Target Rej Status
    - 27 Target Rej Type
    - 28 Targ Rej Level
    - 29 4 mA Set Point
    - 30 20 mA Set Point
    - 31 Damping
    - 32 System Fault State
    - 33 LOE Fault State
    - 34 LOE Delay
    - 35 SZ Fault State
    - 36 SZ Height
    - 37 Trim Level
    - 38 Pipe ID
    - 39 Date/Time/Initials
    - 40 Launcher
    - 41 Algorithm
    - 42 TVG Type
    - 43 TVG Max
    - 44 Fiducial Position
    - 45 Fiducial Gain
    - 46 System Gain
    - 47 Conversion Factor
    - 48 CF #Run Average
    - 49 Ceff
    - 50 Scale Offset
    - 51 #Run Average
    - 52 Adaptive Filter
    - 53 #Adaptive Average
    - 54 Scatter High Limit
    - 55 Rate High Limit
    - 56 Peak Detect Thresh
    - 57 Peak Detect Ref
    - 58 Min Threshhold
    - 59 Max Rate
    - 60 Max Delta Distance
    - 61 SZ Hysteresis
    - 62 ES Delay
    - 63 DataLog
    - 64 4 mA Trim Value
    - 65 20 mA Trim Value
    - 66 Universal Rev
    - 67 Fld Dev Rev
    - 68 Software Rev
    - 69 Num Req Preams

TROUBLESHOOTING SYSTEM PROBLEMS

Symptom	Problem	Solution
Level reading drops out at a repeatable position in the vessel	Multipath is cancelling good level signal	Orient launcher to reduce multipath; turn launcher 20-30 degrees at a time until multipath at this point disappears.
Level reading locked onto a value that is not correct Level	Measurement engine finding a reflection it believes is level signal	1. Is high dielectric (εr>20) foam present 2. Run False Target Rejection routine with Level below this point (or with Empty tank) to eliminate false echoes
LEVEL, % Output and LOOP values are all inaccurate	Basic configuration data questionable	1. Check validity of all configuration data 2. Check DISTANCE value of device against manually measured distance
LEVEL readings are repeatable but consistently high (or low) from actual by a fixed amount	Configuration data does not accurately match tank dimensions	1. Ensure proper values for Tank Height and Sensor Offset 2. Check vessel for present liquid level. Trim Level can be used to ensure exact measurement 3. Reconfigure LOOP values if necessary
LEVEL reading on Display is correct but LOOP is stuck at 4 mA	HART Poll Address set a value of 1-15	Set HART Poll Address to 0
LEVEL reading on Display stuck at value related to Blocking Distance	Device believes antenna is flooded (level very near or on antenna)	Check actual level. If antenna is not flooded, power down, then power up transmitter with the level well below the antenna.

ERROR MESSAGES

The Pulsar Radar transmitter utilizes a 3-section hierarchy for reporting diagnostic conditions: FAULTS, WARNINGS, and INFORMATION. This information can be reviewed at the STATUS screen in the user menu. This screen captures only current conditions. Historical information can be viewed at the DIAGNOSTIC screen in the Factory menu.

FAULT: (highest level) announces a defect or failure in circuitry or software that precludes reliable measurement. The current (mA) value unit defaults to 3.6, 22, or HOLD and a message is displayed on the rotating screen. Further error information can be obtained by viewing the Status or Diagnostic (Factory Menu) screens.

WARNING (MESSAGE): (second level) announces conditions that are not fatal but may affect measurement. A message will occur on the scrolling display screen when a Warning is detected but will not affect output current. Further error information can be obtained by viewing the Status or Diagnostic screens.

INFORMATION (MESSAGE): (lowest level) provides operational factors that are not critical to measurement. Further error information can be obtained by viewing the Status or Diagnostic (Factory Menu) screens.

EFFECTS

	mA Loop	Display Message	Diagnostic (history)
Fault	3.6/22/HOLD	Yes	Yes
Warning	No Effect	Yes	Yes
Information	No Effect	No	Yes

DISPLAY MALFUNCTION

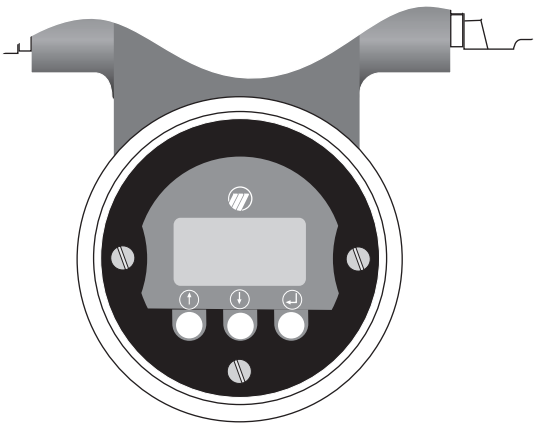

Ambient temp	Symptom
< -20 °C (-5 °F)	Display may temporarily white out
> +70 °C (+160 °F)	Display may temporarily black out
-20 °C up to +70 °C (-5 °F up to +160 °F)	Display will recover without damage

ERROR MESSAGES

	Screen	Problem	Solution
Faults	Echo Lost	Target peak cannot be found	• Increase Turbulence setting • Decrease Dielectric setting • Increase ROC setting • Increase LOE delay • Confirm valid False Target Rejection; re-run if necessary • Possible multipath if lost repeatedly at same point in tank (See Section 2.4.2.3)
	No Fiducial	Can not find valid fiducial signal	Ensure transmitter/antenna Universal connector is tight; Consult Factory if this problem persists
	Safety ZoneAlrm	Level within Safety Zone and SZ Alarm parameters enabled	Normal operation; modify SZ Alarm parameter screens if not operating to expectations
	Default Paramtrs	Configuration parameters are incorrect for application	Modifying one parameter clears this condition; check validity of all parameters
	Sfwr Err Inv Arg	Software algorithms corrupted	Consult Factory
	EE Write failure	EEPROM Write failure	Consult Factory
	EE Read failure	EEPROM Read failure	Consult Factory
	CPU failure	Microprocessor failure	Consult Factory
Warnings	NoTrgRej	False Target Rejection has not been run or manually disabled	Re-run False Target Rejection routine or manually enable
	Level Too High	Indicates liquid is too close to antenna to run this routine	Lower liquid and re-run False Target Rejection routine
	CorptTgR	Invalid False Target Rejection data	Re-run False Target Rejection routine; Consult Factory if problem persists
	FidUnclr	Fiducial signal quality questionable	Ensure transmitter/antenna connection is tight; Consult Factory
	Factory Cal Reqd	Invalid Calibration Data	Transmitter requires re-calibration of Factory parameters; the instrument will continue to operate with reduced performance; Consult Factory
Information (available only in Status or Diagnostic screens)	**Co-processor Communications**		
	IPC bus	Internal communication error	Consult Factory
	IPC chks	Internal communication error	Consult Factory
	IPC leng	Internal communication error	Consult Factory
	IPC ack	Internal communication error	Consult Factory
	Signal		
	DC Noise	Excessive noise on A/D channel	Consult Factory
	Signal Too High	Level signal amplitude excessive	Choose higher Dielectric range, reduce Turbulence or Foam settings; Consult Factory if problem persists
	Signal Too Low	Level signal amplitude insufficient	Choose lower Dielectric range, increase Turbulence or Foam settings; Consult Factory if problem persists
	Quality		
	IncTrgRj	Incomplete Target Rejection. False target only partially captured	Re-run False Target Routine with level lower in vessel
	ScattTgt	Return signals scattered due to turbulence	
	UncerTgt	Target is missing but not determined to be lost	Device is holding last valid value while confirming the target position; will continue based upon setting in LOE Delay screen; Consult Factory if problem persists
	TankInv	Tank dimensions exceed maximum range of the transmitter	Reduce Tank Height and/or Sensor Offset values

SEAL MATERIAL

Material	Code	Maximum Temperature	Maximum Pressure	Min. Temp.	Recommended For Use In	Not Recommended For Use In
Viton® GFLT	0	+200 °C @ 16 bar (+400 °F @ 232 psig)	50 bar @ +20 °C (750 psig @ +70 °F)	-40 °C (-40 °F)	General purpose, steam, ethylene	Ketones (MEK, acetone), skydrol fluids, amines, anhydrous ammonia, low molecular weight esters and ethers, hot hydrofluoric or chlorosuforic acids, sour HCs
EPDM	1	+125 °C @ 14 bar (+250 °F @ 200 psig)	50 bar @ +20 °C (750 psig @ +70 °F)	-50 °C (-60 °F)	Acetone, MEK, skydrol fluids	Petroleum oils, di-ester base lubricants, propane, steam
Simriz SZ 485 (formerly Aegis PF128)	8	+200 °C @ 16 bar (+400 °F @ 232 psig)	50 bar @ +20 °C (750 psig @ +70 °F)	-20 °C (-4 °F)	Inorganic and organic acids (including HF and nitric), aldehydes, ethylene, glycols, organic oils, silicone oils, vinegar, sour HCs, steam, amines, ethylene oxide, propylene oxide	Black liquor, Freon 43, Freon 75, Galden, KEL-F liquid, molten sodium, molten potassium
Kalrez (4079)	2	+200 °C @ 16 bar (+400 °F @ 232 psig)	50 bar @ +20 °C (750 psig @ +70 °F)	-40 °C (-40 °F)	Inorganic and organic acids (including HF and nitric), aldehydes, ethylene, glycols, organic oils, silicone oils, vinegar, sour HCs	Black liquor, hot water/steam, hot aliphatic amines, ethylene oxide, propylene oxide, molten sodium, molten potassium

REPLACEMENT PARTS

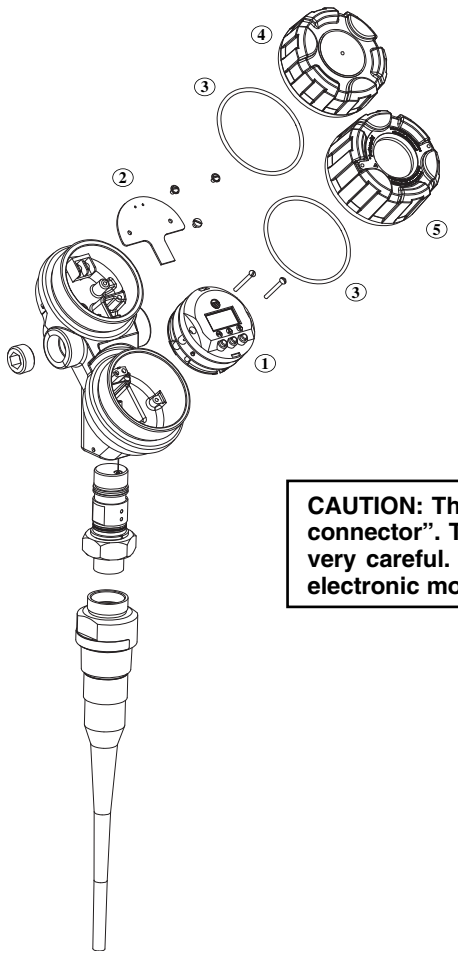

No.	*Description*	*Part Number*
1	Electronic module (5.8 GHz)	Z31-2827-003
2	Terminal board General Purpose (GP) Intrinsically Safe (IS) Explosion Proof (XP)	Z30-9143-001
3	O-Ring (Viton®)	012-2201-237
4	Housing cover without glass	004-9193-002
5	Housing cover with glass (GP/IS) Housing cover with glass (XP)	036-4410-001 036-4410-005

CAUTION: The electronic module connects to the antenna via the "high frequency connector". This part is extremely sensitive and brittle and requires to be handled very careful. It is recommended to exchange complete ampifier heads instead of electronic modules in the field.

Viton® is a registered trademark of Dupont Performance Elastomers

DIMENSIONS IN mm (inches)

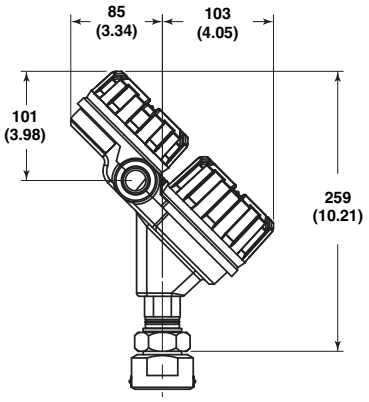

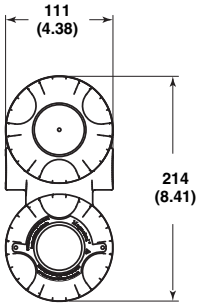

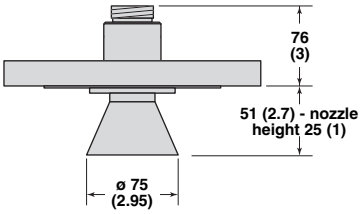

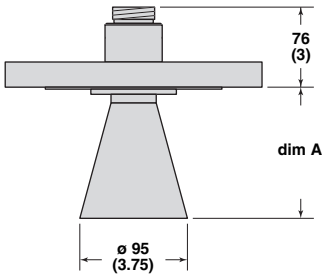

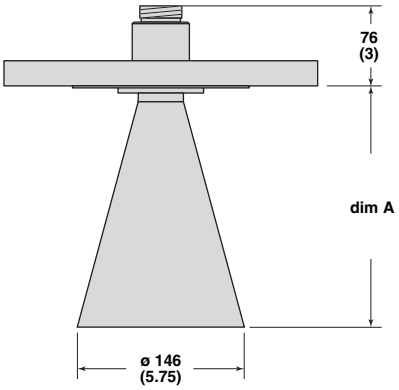

Max nozzle height	dim A
100 mm (4")	117 (4.6)
200 mm (8")	213 (8.4)
300 mm (12")	315 (12.4)

Max nozzle height	dim A
200 mm (8")	211 (8.3)
300 mm (12")	315 (12.4)

3" Horn **4" Horn** **6" Horn**

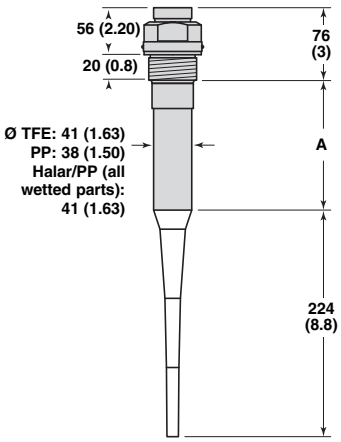

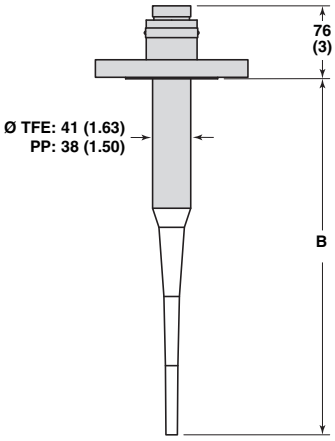

Nozzle height	A (inactive part)	B (antenna extension)
25 (1)①	58 (2.3)	282 (11.1)
100 (4)	130 (5.1)	356 (14.0)
200 (8)	231 (9.1)	457 (18.0)
300 (12)	333 (13.1)	559 (22.0)

① Standard antenna with threaded connections only.

Threaded connection BSP/NPT (extended antenna shown)

Flanged connection ANSI/DIN

TRANSMITTER SPECIFICATIONS

FUNCTIONAL/PHYSICAL

Description		*Specification*
Operating frequency (approvals)		5,8 GHz (Europe - RTTE), 6,3 GHz (U.S.A. - FCC / Canada - Ic)
Power (at terminals)		General Purpose / ATEX Explosion Proof (with Intrinsically Safe electronics) 16 to 36 V DC ATEX Intrinsically Safe: 16 to 28,6 V DC
Signal Output		4-20 mA with HART® - version 5 compatible 3,8 to 20,5 mA useable (meets NAMUR NE 43)
Span		0,2 to 20 m (0.5 to 65 ft)
Resolution		Analog: 0,01 mA Display: 0,1 cm (inch)
Loop Resistance (see tables at page 12)		400 Ω @ 24 V DC / 20 mA
Damping		Adjustable 0-45 s
Diagnostic Alarm		Adjustable 3,6 mA, 22 mA or HOLD
User Interface	Local	3-button keypad – 2-line x 8-character LCD
	H.H.U.	HART® communicator (version 5.x)
	PC/Laptop	AMS® or PACT*ware*™ – for more info: ask for bulletin 59-101
Display		2-line x 8-character LCD
Menu Language		English/Spanish/French/German – selectable via menu configuration
Housing Material		IP 66/Aluminium A356T6 (< 0.20 % copper) or stainless steel
Approvals		ATEX II 1G EEx ia II C T4, ATEX II 1/2G EEx d II C T6, FM and CSA Non Incendive, I.S. and XP LRS – Lloyds Register of Shipment (marine applications)
SIL (Safety Integrity Level)		Functional safety to SIL1/SIL2 (redundant installation) in accordance to IEC 61508 SFF of 73,7 % - full FMEDA report available
Electrical Data		Ui = 28,4 V, Ii = 94 mA, Pi = 0,67 W
Equivalent Data		Ci = 2,2 nF, Li = 430 µH
Shock/Vibration Class		ANSI/ISA-S71.03 SA1 (Shock), ANSI/ISA-S71.03 VC2 (Vibration)
Net and Gross Weight – amplifier		2,40 kg net; 2,80 kg gross (Aluminium) – 5,30 kg net; 5,7 kg gross (SST)
Gross Weight – antenna		4" - 150 lbs horn antenna: 8,30 kg Std. dielectric rod antenna: 0,90 kg

PERFORMANCE

Description	*Specification*
Reference Conditions	Reflection from ideal reflector, at +20 °C (70 °F)
Linearity	± 1 cm (0,4") or 0,1 % of tank height (whichever is greater)
Accuracy	± 1 cm (0,4") or 0,1 % of tank height (whichever is greater) (performance will degrade slightly within 1,5 m (60") of antenna)
Sensitivity	± 2,5 mm (0.1")
Repeatability	± 5 mm (0,2") or 0,05 % of tank height (whichever is greater)
Max fill/drain rate	4,5 m/min (180 inch/min)
Response Time	< 1 second
Warm-up Time	30 seconds
Ambient Temp.	-40 °C to +80 °C (-40 °F to +175 °F) - operating temperature -40 °C to +70 °C (-40 °F to +160 °F) - ATEX Exd -20 °C to +70 °C (-5 °F to +160 °F) - with display function
Process dielectric effect	< 7,5 mm (0.3") within selected range
Ambient temp. effect	0,05 % of tank height per 10 °C
Humidity	0-99 %, non-condensing
Electromagnetic Compatibility	Meets CE requirements (EN-61326)

LOOP RESISTANCE

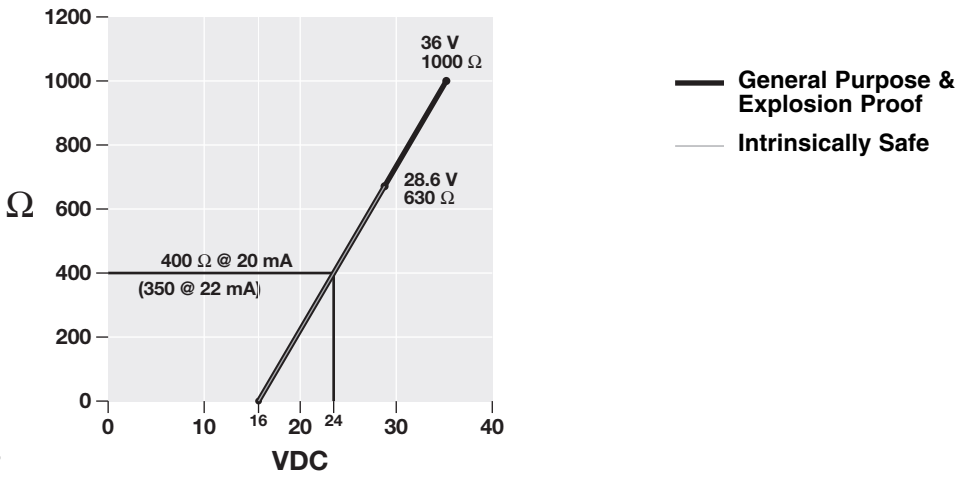

ANTENNA SPECIFICATIONS

Description		*3"/4"/6" Horn antenna*
Materials	Antenna	TFE (Teflon)
	Horn	316/316L (1.4401/1.4404), Hastelloy C (2.4819)
	Process seal	Viton® GFLT, EPDM, Kalrez 4079 or Simriz SZ 485 (formerly Aegis PF 128)
Horn diameter	3"	75 mm (2.95")
	4"	95 mm (3.75")
	6"	146 mm (5.75")
Mounting		See mounting considerations on page 2 (use Eclipse® 705 for mounting in external cages or stillwells)
Process Connection		Flanged: Various ANSI or DIN flanges
Blocking distance ①		min 50 mm (2") below horn
Max Process Temp.		+200 °C @ 3,5 bar (+400 °F @ 50 psi)
Max Process Pressure		46,5 bar @ +20 °C (675 psi @ +70 °F) - see table at page 16
Vacuum service		Up to full vacuum
Beam angle - see page 2	3"	strictly for use in stillwell/standpipe
	4"	25 °
	6"	17 °
Dielectric Range		1,7 to 100

Description		*TFE (Teflon®) dielectric rod*	*PP (Polypropylene®) dielectric rod*
Materials	Antenna	TFE (Teflon)	PP (Polypropylene)
	Process seal	Viton® GFLT, EPDM, Kalrez 4079 or Simriz SZ 485 (formerly Aegis PF 128)	Viton® "O"ring
	Mounting connection	316/316L (1.4401/1.4404), Hastelloy C (2.4819), Monel (2.4360) or PP (Polypropylene)	316/316L (1.4401/1.4404)
Mounting		See mounting considerations on page 2 (use Eclipse® 705 for mounting in external cages or stillwells)	
Process Connection		1½" NPT/BSP (G1½) Flanged: Various ANSI or EN/DIN flanges	
Blocking distance ①		min 50 mm (2") below rod	
Max Process Temp.		+200 °C @ 3,5 bar (+400 °F @ 50 psi)	+95 °C @ 3,5 bar (+200 °F @ 50 psi)
Max Process Pressure - see table at page 16		46,5 bar @ +20 °C (675 psi @ +70 °F)	52 bar @ +20 °C (750 psi @ +70 °F)
Vacuum service		Up to full vacuum	
Beam angle - see table at page 2		25 °	
Dielectric Range		2,0 to 100	

Description		*All-Polypropylene®*	*All-Halar®*
Materials	Antenna	PP (Polypropylene)	Halar®
	Process seal	Viton® "O"ring	
	Mounting connection	PP (Polypropylene)	Halar®
Mounting		See mounting considerations on page 2 and 3 (recommended to use Eclipse® 705 for mounting in external cages or stillwells)	
Process Connection		1½" NPT/BSP (G1½) Flanged: Various ANSI or EN/DIN flanges	
Blocking distance ①		min 50 mm (2") below rod	
Max Process Temp.		+95 °C @ 3,5 bar (+200 °F @ 50 psi)	+150 °C (+300 °F) @ atmosph.
Max Process Pressure - see table at page 16		Flanged: 14 bar @ +20 °C (200 psi @ + 70 °F) Threaded: 3,5 bar @ +20 °C (50 psi @ + 70 °F)	
Vacuum service		Up to full vacuum	
Beam angle - see table at page 2		25 °	
Dielectric Range		2,0 to 100	

① Blocking distance = zone at the top in which level measurement is unreliable.

Viton® is a registered trademark of Dupont Performance Elastomers

TEMPERATURE - PRESSURE

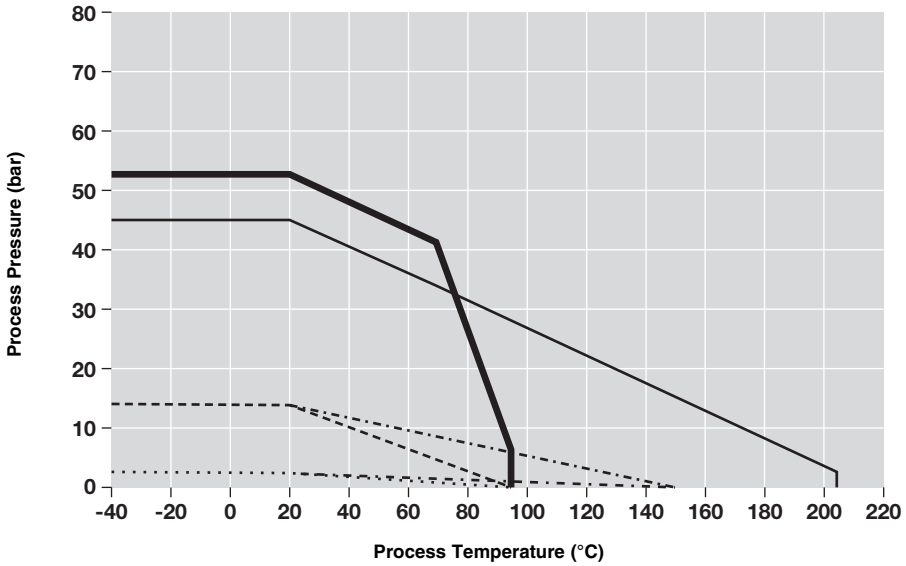

- Polypropylene Rod
- Horn & PTFE Rod
- Polypropylene (all wetted parts) – flanged
- Halar (all wetted parts) – flanged
- Polypropylene (all wetted parts) – threaded
- Halar (all wetted parts) – threaded

MODEL IDENTIFICATION

A complete measuring system consists of:

1. Pulsar® transmitter head/electronics
2. Pulsar® antenna:
   For the most optimal antenna selection, check first the min. dielectric of the liquid versus the expected wave height (turbulence) to define whether the required range can be met. The less obstructions are within the beam angle, the better performance – therefore check as of next the beam angle spread of the antenna versus the obstructions in the tank. See Beam Angle and Dielectric/Turbulence/Max distance tables. Two antenna styles exist:
   - Horn antenna – always flanged mounting, best performing configuration. Suited for standpipe / stillwell mounting.
   - Dielectric rod – threaded or flanged, most flexible mounting but less efficient
3. OPTION: Mounting flanges for threaded versions
4. Free of charge: Magnetrol master C.D. with Pulsar R05 DTM (PACT*ware*®). Code: **090-BE59-200** (included in each order).

1. Code for PULSAR® R05 transmitter head/electronics

BASIC MODEL NUMBER

R 0 5	5,8 GHz - 24 V DC loop powered, Pulsar® Pulse Burst radar

SIGNAL OUTPUT

5 1 0 A	4-20 mA with Hart communication and integral digital display/keypad

MOUNTING/CLASSIFICATION (consult factory for FM/CSA approvals)

1	Integral, general purpose (& I.S. FM/CSA)
A	Integral, ATEX II 1 G EEx ia IIC T4
C	Integral, ATEX II 1/2 G EEx d IIC T6

CABLE ENTRY / HOUSING MATERIAL (IP rating)

1 0	3/4" NPT, Cast aluminium dual compartment housing (IP 66)
2 0	M20 x 1,5, Cast aluminium dual compartment housing (IP 66)
3 0	3/4" NPT, Cast stainless steel dual compartment housing (IP 66)
4 0	M20 x 1,5, Cast stainless steel dual compartment housing (IP 66)

R 0 5 – 5 1 0 A – [ ] [ ] 0 **complete code for PULSAR® R05 transmitter head/electronics**

2. Code for PULSAR R05: horn antenna

BASIC MODEL NUMBER

R A 3	Pulsar 3" horn antenna - use only for mounting on standpipe/stillwell
R A 4	Pulsar 4" horn antenna
R A 6	Pulsar 6" horn antenna - use 6" / DN 150 size process connection flanges

MATERIAL OF CONSTRUCTION

A	316/316L (1.4401/1.4404) stainless steel	- All
B	Hastelloy C (2.4819)	- RA4 and RA6

PROCESS CONNECTION - SIZE/TYPE (Consult factory for larger flange sizes)

ANSI flanges

5 3	3" 150 lbs ANSI RF
5 4	3" 300 lbs ANSI RF
5 5	3" 600 lbs ANSI RF
6 3	4" 150 lbs ANSI RF
6 4	4" 300 lbs ANSI RF
6 5	4" 600 lbs ANSI RF
7 3	6" 150 lbs ANSI RF
7 4	6" 300 lbs ANSI RF
7 5	6" 600 lbs ANSI RF

EN/DIN flanges

E A	DN 80	PN 16	EN 1092-1 Type A
E B	DN 80	PN 25/40	EN 1092-1 Type A
E D	DN 80	PN 63	EN 1092-1 Type B2
F A	DN 100	PN 16	EN 1092-1 Type A
F B	DN 100	PN 25/40	EN 1092-1 Type A
F D	DN 100	PN 63	EN 1092-1 Type B2
G A	DN 150	PN 16	EN 1092-1 Type A
G B	DN 150	PN 25/40	EN 1092-1 Type A
G D	DN 150	PN 63	EN 1092-1 Type B2

PROCESS SEAL - MATERIAL

0	Viton® GFLT seal	-40 °C (-40 °F) / +200 °C (+400 °F)
1	EPDM (Ethylene Propylene)	-50 °C (-60 °F) / +125 °C (+250 °F)
2	Kalrez 4079 seal	-40 °C (-40 °F) / +200 °C (+400 °F)
8	Simriz SZ 485 (formerly Aegis PF 128 seal)	-20 °C (-4 °F) / +200 °C (+400 °F)

ANTENNA EXTENSION

0 0 0	Only for use with 3" horn antenna	RA3
1 0 0	For nozzle height ≤ 100 mm (4")	RA4
2 0 0	For nozzle height ≤ 200 mm (8")	RA4/RA6
3 0 0	For nozzle height ≤ 300 mm (12")	RA4/RA6

R A [ ] – [ ][ ][ ][ ] – [ ] 0 0 **complete code for PULSAR® R05: horn antenna**

MODEL IDENTIFICATION

BASIC MODEL NUMBER

R A A	Pulsar® dielectric rod antenna in TFE (Teflon®)
R A B	Pulsar® dielectric rod antenna in PP (Polypropylene)
R A C	Pulsar® dielectric rod antenna in Halar®

MATERIAL OF CONSTRUCTION

A	316/316L (1.4401/1.4404) stainless steel inactive part with TFE or PP antenna (RAA & RAB)
B	Hastelloy C (2.4819) inactive part with TFE antenna (RAA)
C	Monel (2.4360) inactive part with TFE antenna (RAA)
G	All-plastic antenna (RAB and RAC)

PROCESS CONNECTION - SIZE/TYPE

Threaded

3 1	1½" NPT thread	min nozzle Ø: 50 mm (2")
3 2	1½" BSP (G1½) thread	min nozzle Ø: 50 mm (2")

ANSI flanges ①

4 3	2" 150 lbs ANSI RF
4 4	2" 300 lbs ANSI RF
4 5	2" 600 lbs ANSI RF
5 3	3" 150 lbs ANSI RF
5 4	3" 300 lbs ANSI RF
5 5	3" 600 lbs ANSI RF
6 3	4" 150 lbs ANSI RF
6 4	4" 300 lbs ANSI RF
6 5	4" 600 lbs ANSI RF
7 3	6" 150 lbs ANSI RF②
7 4	6" 300 lbs ANSI RF②
7 5	6" 600 lbs ANSI RF②

EN/DIN flanges ①

D A	DN 50	PN 16	EN 1092-1 Type A
D B	DN 50	PN 25/40	EN 1092-1 Type A
D D	DN 50	PN 63	EN 1092-1 Type B2
E A	DN 80	PN 16	EN 1092-1 Type A
E B	DN 80	PN 25/40	EN 1092-1 Type A
E D	DN 80	PN 63	EN 1092-1 Type B2
F A	DN 100	PN 16	EN 1092-1 Type A
F B	DN 100	PN 25/40	EN 1092-1 Type A
F D	DN 100	PN 63	EN 1092-1 Type B2
G A	DN 150	PN 16	EN 1092-1 Type A②
G B	DN 150	PN 25/40	EN 1092-1 Type A②
G D	DN 150	PN 63	EN 1092-1 Type B2②

Sanitary 316/316L (1.4401/1.4404) connections – use only material of construction code A

4 P	2" Triclover, 16 AMP
5 P	3" Triclover, 16 AMP
6 P	4" Triclover, 16 AMP
7 P	6" Triclover, 16 AMP

① Metal flanges welded to antenna
② Not available with plastic facing for RAB-G and RAC-G

PROCESS SEAL - MATERIAL (see page 12 for selection assistance)

0	Viton® GFLT seal	-40 °C (-40 °F) / +200 °C (+400 °F)
1	EPDM (Ethylene Propylene)③	-50 °C (-60 °F) / +125 °C (+250 °F)
2	Kalrez 4079 seal③	-40 °C (-40 °F) / +200 °C (+400 °F)
8	Simriz SZ 485 (formerly Aegis PF 128 seal)③	-20 °C (-4 °F) / +200 °C (+400 °F)

③ Not with all-plastic antenna (RAB-G and RAC-G)

ANTENNA EXTENSION

0 0 0	For nozzle height < 25 mm (1") - always threaded process connection
1 0 0	For nozzle height < 100 mm (4")
2 0 0	For nozzle height < 200 mm (8") (ESP for RAA only)
3 0 0	For nozzle height < 300 mm (12")

R A ☐ – ☐ ☐ ☐ ☐ – ☐ 0 0 **complete code for PULSAR® R05: dielectric rod antenna**

Viton® is a registered trademark of Dupont Performance Elastomers

RX5 Radar Transmitter

Configuration Data Sheet

Copy blank page and store calibration data for future reference and troubleshooting.

Item	Screen	Value	Item (factory defaults)	Screen	Value
Vessel Name			Display Factory	«Disp Fact»	
Vessel #			Diagnostics	«Diagnost»	
Media & Dielectric			Target Rejection Level	«TrgRjLvl»	
Tag #			Launcher	«Launcher»	
Electronics Serial #			Factory Cal	«Fact Cal»	
Antenna Serial #			Peaks #0		
Level	«Level»		#1		
Units	«Units»		#2		
Antenna Type	«AntnaTyp»		#3		
Antenna Extension	«AntnaExt»		#4		
Antenna Mounting	«AntnaMnt»		Algorithm	«Algorithm»	
Sensor Offset	«SnsrOfst»		Range	«Range»	
Tank Top	«Tank Top»		TVG Type	«TVG Type»	
Tank Height	«Tank Ht»		TVG Maximum	«TVG Max»	
Blocking Distance	«Block Dis»		Fiducial Position	«Fid Pos»	
Level Offset	«LevlOfst»		Fiducial Gain	«Fid Gain»	
Dielectric	«Dielctrc»		System Gain	«Sys Gain»	
Turbulence	«Turbulnc»		Conversion Factor	«Conv Fct»	
Rate of Change	«RateChng»		Cef dm/s	«Cef dm/s»	
Amount of Foam	«Foam»		Scale Offset	«Scl Offs»	
Targets #1	Q____ - _____		Distance Correction	«DistCor»	
#2	Q____ - _____		Echo Amplitude	«Echo Amp»	
#3	Q____ - _____		# Run Average	«RunAvr»	
#4	Q____ - _____		Adaptive Filter	«Adapfilt»	
#5	Q____ - _____		#Adap Average	«AdapAv»	
Target Rejection	«Targ Rej»		Scatter High	«ScatHigh»	
4 mA point	«Set 4mA»		Rate High	«RateHigh»	
20 mA point	«Set 20mA»		Scat Rate	«ScatRate»	
Damping Factor	«Damping»		Peak Detect Reference	«PkDetRef»	
System Fault	«SysFault»		Peak Detect Threshold	«PkDetThr»	
Loss of Echo Fault	«LOEFault»		Minimum Threshold	«Min Thr»	
Loss of Echo Delay	«LOEDelay»		ROC/min	«ROC /min»	
Safety Zone Fault	«SZ Fault»		Maximum Rate	«Max Rate»	
Safety Zone Height	«SZ Height»		Maximum dD	«Max dD»	
Safety Zone Alarm Reset	«SZ Alarm»		Safety Zone Hysteresis	«Sz Hyst»	
HART Poll Address	«Poll Adr»		ES Delay	«ES Delay»	
Trim 4 mA	«Trim 4»		Data Log	«Datalog»	
Trim 20 mA	«Trim 20»		**Name**		
Trim Level	«Trim Lvl»		**Date**		
Pipe Inside Diameter	«Pipe ID»		**Time**		
Loop Test	«Loop Tst»		**NOTES:**		
New Password	«New Pass»				
Status	«Status»				
Language	«Language»				
Software Version	«Model RX5 VerX.XXX»				

IMPORTANT

SERVICE POLICY

Owners of Magnetrol products may request the return of a control; or, any part of a control for complete rebuilding or replacement. They will be rebuilt or replaced promptly. Magnetrol International will repair or replace the control, at no cost to the purchaser, (or owner) ***other than transportation cost*** if:

a. Returned within the warranty period; and,
b. The factory inspection finds the cause of the malfunction to be defective material or workmanship.

If the trouble is the result of conditions beyond our control; or, is **NOT** covered by the warranty, there will be charges for labour and the parts required to rebuild or replace the equipment.
In some cases, it may be expedient to ship replacement parts; or, in extreme cases a complete new control, to replace the original equipment before it is returned. If this is desired, notify the factory of both the model and serial numbers of the control to be replaced. In such cases, credit for the materials returned, will be determined on the basis of the applicability of our warranty.
No claims for misapplication, labour, direct or consequential damage will be allowed.

RETURNED MATERIAL PROCEDURE

So that we may efficiently process any materials that are returned, it is essential that a “Return Material Authorisation” (RMA) form will be obtained from the factory. It is mandatory that this form will be attached to each material returned. This form is available through Magnetrol’s local representative or by contacting the factory. Please supply the following information:

1. Purchaser Name
2. Description of Material
3. Serial Number and Ref Number
4. Desired Action
5. Reason for Return
6. Process details

All shipments returned to the factory must be by prepaid transportation. Magnetrol ***will not accept*** collect shipments.

All replacements will be shipped FOB factory.

BULLETIN N°: BE 58-601.2
EFFECTIVE: JUNE 2007
SUPERSEDES: June 2005

UNDER RESERVE OF MODIFICATIONS

Magnetrol®

www.magnetrol.com

BENELUX	Heikensstraat 6, 9240 Zele, België Tel. +32 (0)52.45.11.11 • Fax. +32 (0)52.45.09.93 • E-Mail: info@magnetrol.be
DEUTSCHLAND	Alte Ziegelei 2-4, D-51491 Overath Tel. 02204 / 9536-0 • Fax. 02204 / 9536-53 • E-Mail: vertrieb@magnetrol.de
FRANCE	40 - 42, rue Gabriel Péri, 95130 Le Plessis Bouchard Tél. 01.34.44.26.10 • Fax. 01.34.44.26.06 • E-Mail: magnetrolfrance@magnetrol.fr
ITALIA	Via Arese 12, I-20159 Milano Tel. (02) 607.22.98 (R.A.) • Fax. (02) 668.66.52 • E-Mail: mit.gen@magnetrol.it
UNITED KINGDOM	Unit 1 Regent Business Centre, Jubilee Road Burgess Hill West Sussex RH 15 9TL Tel. (01444) 871313 • Fax (01444) 871317 • E-Mail: sales@magnetrol.co.uk
INDIA	C-20 Community Centre, Janakpuri, New Delhi - 110 0058 Tel. 91 (11) 41661840 • Fax 91 (11) 41661843 • E-Mail: info@magnetrolindia.com