PULSAR™ R05

Pulse Burst Radar Level Transmitter

DESCRIPTION

The Pulsar™ Radar transmitter is the latest generation of loop-powered, 24 V DC, level transmitters. It has lower power consumption, faster response time and is easier to use than most loop-powered radar transmitters.

The Pulsar™ is designed to provide unparalleled performance and ease of use. Pulsar non-contact radar is the perfect compliment to the Magnetrol Eclipse® Guided Wave Radar. These transmitters offer the ultimate solution to the vast majority of process level applications.

Through-Air Measurement

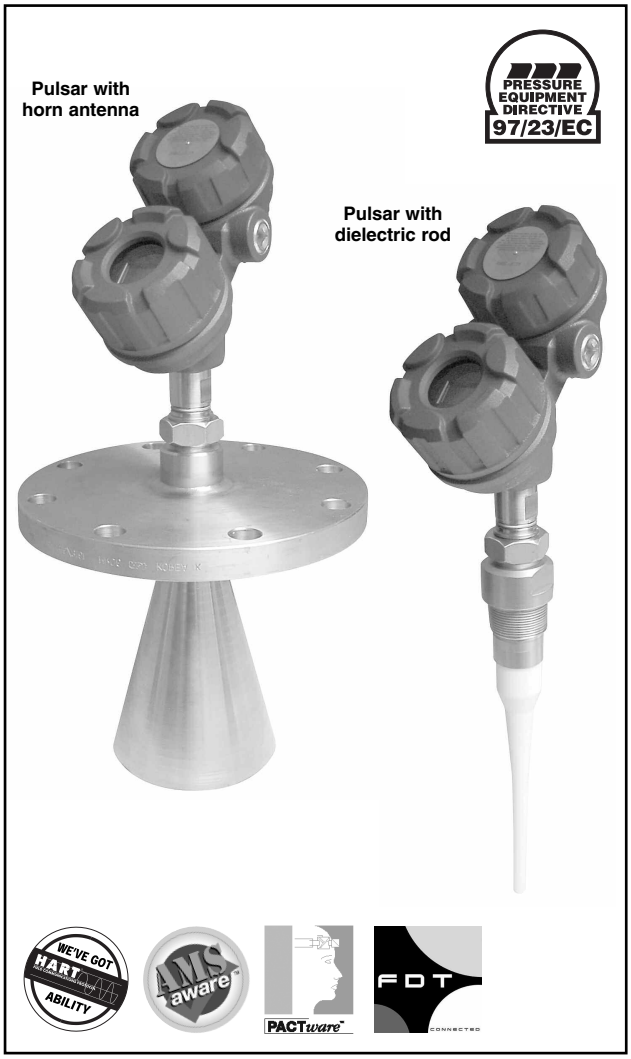

FEATURES

- 6 GHz operating frequency offers superior performance in the tougher applications of turbulence, foam, and heavy vapours.
- Two-wire, intrinsically safe loop powered level transmitter.
- 360° rotatable housing can be dismantled without depressurizing the vessel via "Quick connect/disconnect" probe coupling.
- Two-line, 8-character LCD and 3-button keypad.
- 2 antenna styles up to +200 °C / 52 bar (+400 °F / 750 psig):
  - horn antenna: 3", 4" and 6"
  - dielectric rod antenna: PP and TFE.
- Measuring range up to 20 m.
- False target setup is simple, intuitive and effective.
- Will reliably track extremely rapid rate of change up to 4,5 m (180") / minute.
- Suited for SIL 1 and SIL 2 loops (full FMEDA report available).

APPLICATIONS

MEDIA: Liquids or slurries; hydrocarbons to water-based media (dielectric 1,7 - 100).

VESSELS: Most process or storage vessels up to rated probe temperature and pressure. Pits and non metallic tanks.

CONDITIONS: Virtually all level measurement and control applications including process conditions exhibiting visible vapours, some foam, surface agitation, bubbling or boiling, high fill/empty rates, low level and varying dielectric media or specific gravity.

AGENCY APPROVALS

Agency	Approvals
ATEX	ATEX II 1 G EEx ia IIC T4, intrinsically safe ATEX II 1/2 G EEx d IIC T6, explosion proof
FM/CSA①	Non Incendive / Intrinsically safe / Explosion proof
LRS	Lloyds Register of Shipment (marine applications)

① Consult factory for proper partnumbers

MOUNTING CONSIDERATIONS

The Pulsar Radar transmitter can be mounted to a vessel using a variety of process connections. Generally either a threaded or flanged connection is used.

LOCATION

Ideally the Radar transmitter should be mounted ½ radius from center providing an unobstructed signal path to the liquid surface where it should illuminate (with microwave energy) the largest possible surface area. Tank walls may produce reflections that must be minimized during field configuration (see orientation).

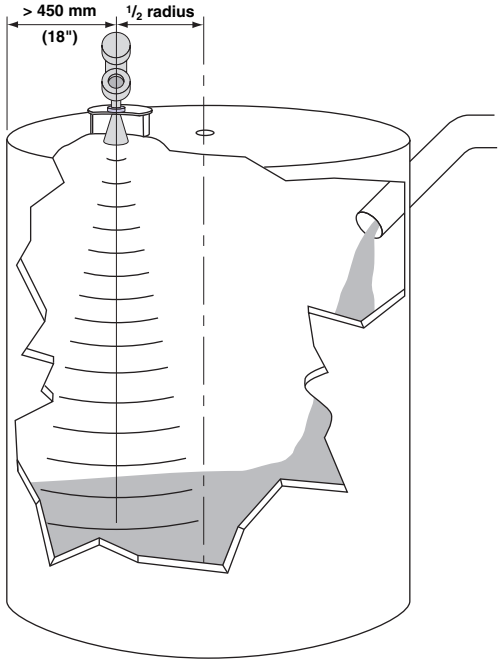

OBSTRUCTIONS

Almost any object that falls within the beam pattern will cause reflections that may be misinterpreted as a false liquid level. Although Pulsar has a powerful False Target Rejection routine, all possible precautions should be taken to minimize false target reflections with proper installation and orientation.

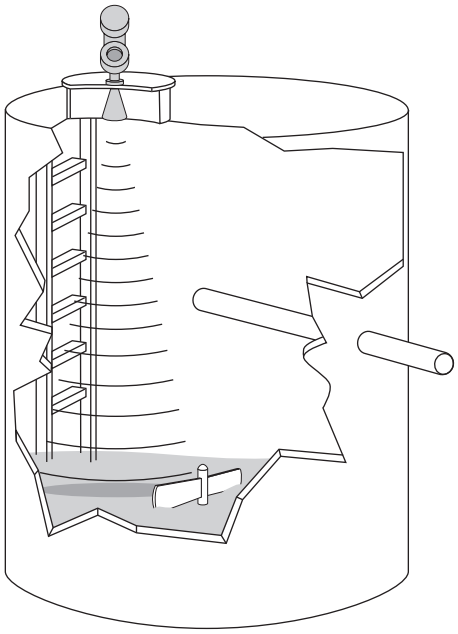

ORIENTATION

The Pulsar® transmitter utilizes a linearly polarized, microwave beam that can be rotated to improve its performance. Proper orientation can minimize unwanted target reflections, decrease sidewall reflections (multipath) and maximize direct reflections from the liquid surface. The index mark located on the side of the launcher is oriented in the same direction as the polarization.

The launcher is considered to be at 0° when the index mark is closest to the tank wall.

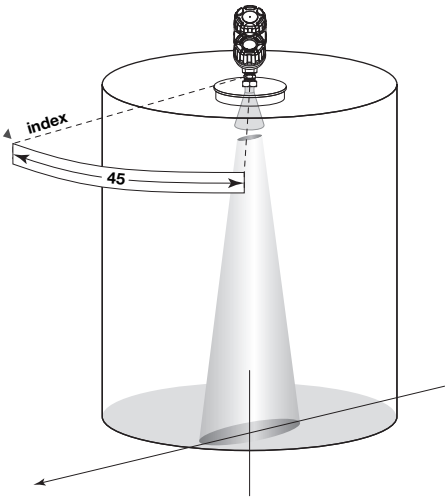

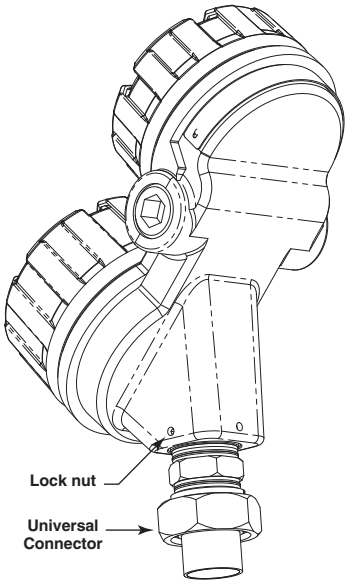

STANDPIPES AND STILLWELLS

Pulsar can be mounted into a standpipe or stillwell but specific considerations should be given:

Considerations for the standpipe or stillwell:

- Only use in metal stillwells/ standpipes: min 80 mm – max 200 mm Ø (3 – 8")
- Venting holes and slots should not be larger than 13 mm (0.5)
- Smooth welds, no reducers allowed, and the length of the stillwell / standpipe = the measuring length (liquid must be at all times in the stillwill /standpipe)
- When isolation valves are used, use a full port valve of the same diam. of the standpipe diam.
- When the stillwell is near to the bottom and ε_r is low (1.7 ..3.0), use a deflector plate to eliminate tank bottom reflections

Considerations for the unit:

- Only use horn antenna sized to the pipe dia.
  - 3" antenna for pipe sizes DN 80 / 3"
  - 4" antenna for pipe sizes DN 100 up to 150 / 4" up to 6"
  - 6" antenna for pipe sizes DN 200 / 8" and above
- Rotate unit until index is in 90° versus process connection
- Enter the inside pipe Ø in the menu screen «pipe ID». The installation into a pipe increases the systems' sensitivity. Entering a pipe inside diameter reduces the gain which automatically compensates for this.

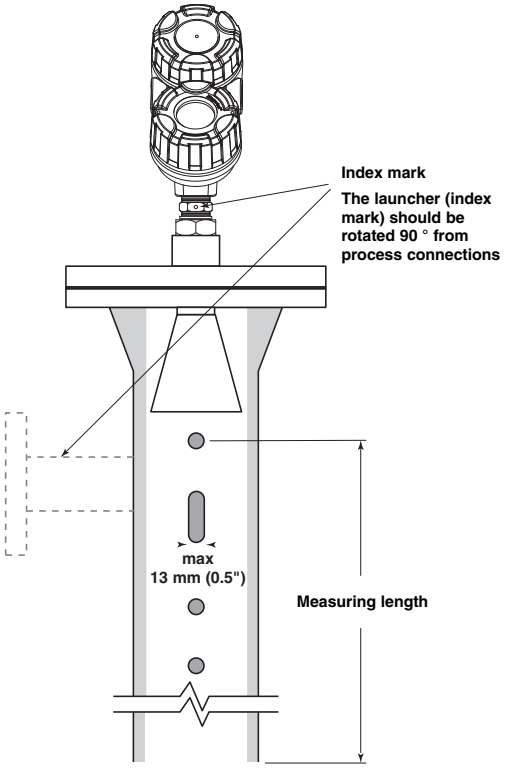

Apply the following table to determine max measuring range

Antenna size	Pipe size sch 40 - wall thickness of 5 mm(0.19")		max range in meters (ft)
3"	DN 80	3"	18,3 (60.0)
4"	DN 100	4"	19,1 (62.7)
		6"	19.6 (64.3)
6"	DN 150 DN 200	8"	19.8 (65.0)

Pipe inside diameters are within range for pipe sizes up to sch 40 or wall thickness of 5 mm (EN/DIN).

For larger pipe sizes, use above pipe sizes as a max inside diameter regardless outside diameter.

TECHNOLOGY

Pulsar™ Pulse Burst Radar emits short bursts of 5.8 GHz (Europe) or 6.3 GHz (North America) energy to a liquid surface. An ultra-high-speed timing circuitry measures the time of the signal reflected off the liquid surface.

Sophisticated signal processing filters out false reflections and other background noises. The exact level is then calculated, by factoring tank height and sensor offset information. The Pulsar® circuitry is extremely energy efficient so no duty cycling is needed like with likewise radars. This allows to track high rates of level changes up to 4,5 m/minute (180"/min).

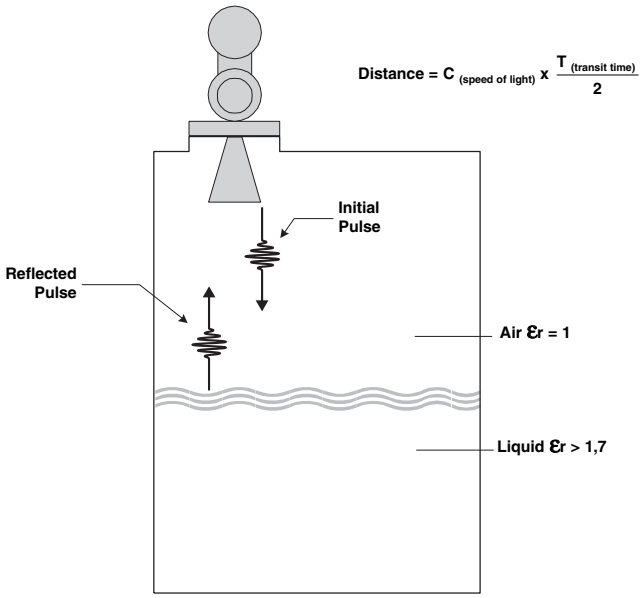

APPLICATIONS

Storage and intermediate holding tanks

Conditions: calm surfaces

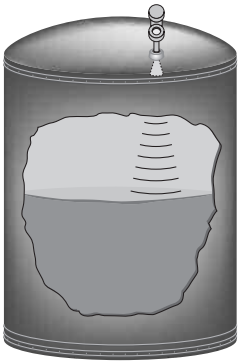

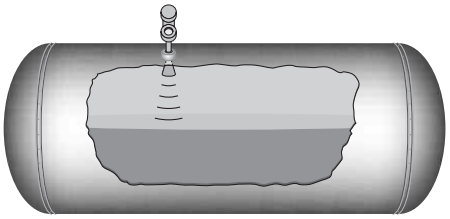

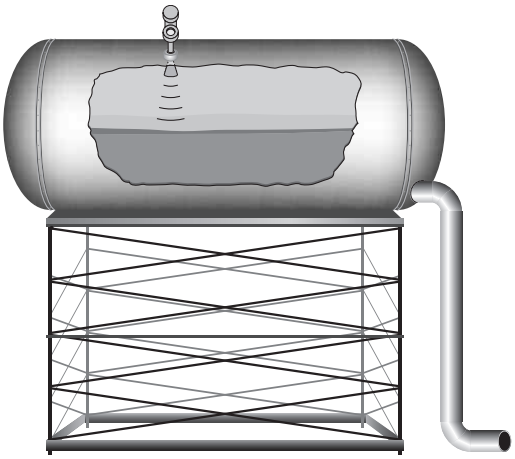

Reactors, mixers and blending vessels

Conditions: turbulence, foam and changing dielectric

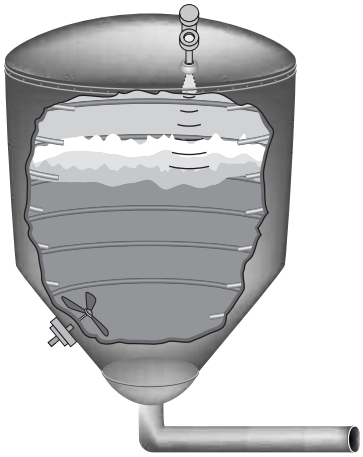

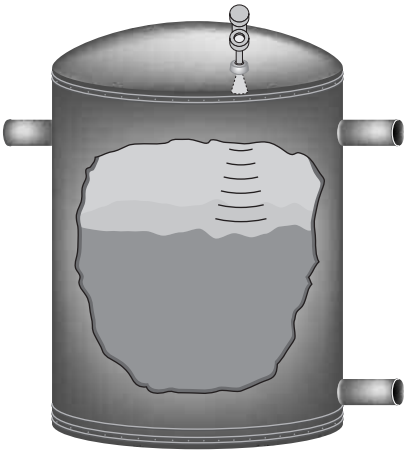

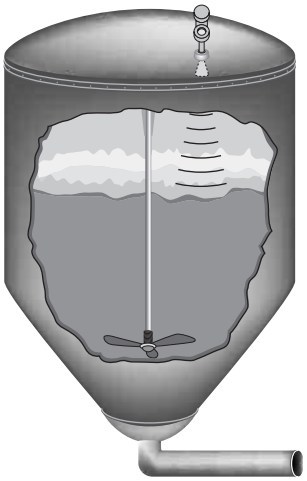

Sumps

Conditions: turbulence, foam and changing dielectric

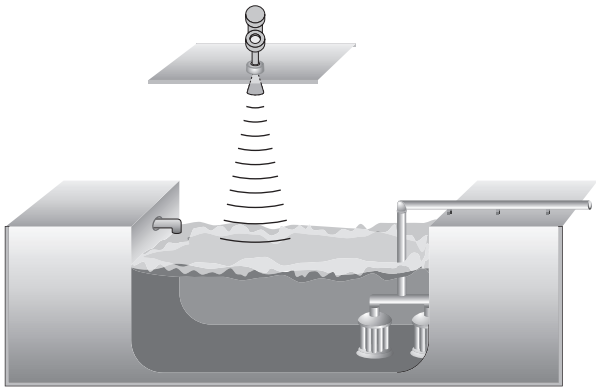

Chambers and bypass

Use Eclipse® guided wave radar. See bulletin BE 57-101

SAFETY INTEGRITY LEVELS 1 & 2

Pulsar® R05 is able to achieve SIL 1 classification as 1oo1 device per IEC 61508. The below table offers the possibility to compare on a one-to-one basis, the SIL performance of Pulsar with other level transmitters.

1oo1: One-out-of-one device means the suggested SIL class by the manufacturer is achieved by a single transmitter. The use of 2 transmitters to achieve a higher SIL classification is often stated as 1oo2 (one out of two) devices.

SFF: Safe Failure Fraction is the ratio between detected (safe and dangerous) and undetected (safe) instrument failures versus total failures by the instrument. The % of this ratio is preferably as high as possible.

PFDavg: Average probability of failure on demand. This value is preferably as low as possible.

For more complete information, ask for the Pulsar FMEDA report by Exida.

	Model R05	
SIL	1 as 1oo1	
Intrument Type	B	
SFF	73,7 %	
PFDavg	9,72E-04	
	FITS	**Annual**
Fail Dangerous Undetected	222	1,94E-03
Fail Dangerous Detected	308	2,70E-03
Safe	314	2,75E-03

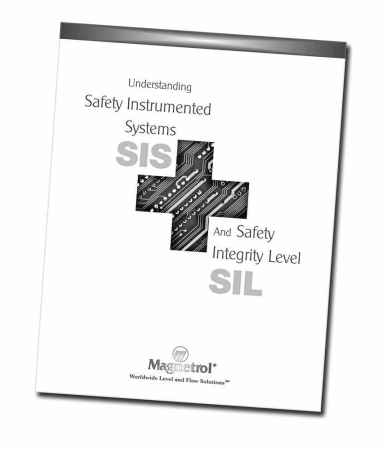

Ask for our SIL manual 41-299

PACT*ware*® PC SOFTWARE PROGRAM

PACT*ware* PC software and the new Field Device Tool (FDT) standard take level measurement to a new level of setup efficiency and user-friendliness. The powerful Pulsar® transmitter with its linear program is easy to use. PACT*ware* builds on that ease of use by adding a graphical software interface. Simply connect your PC through the HART® loop and all functionality can be accessed quickly, conveniently, and safely.

Refer to PACT*ware* bulletins 59-101 and 59-601 for more information.

ONLINE PARAMETERS

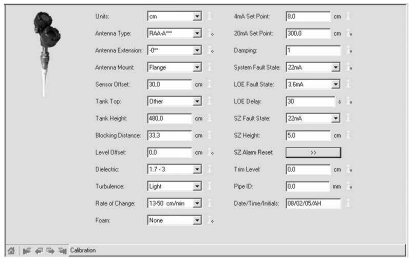

PROCESS TREND

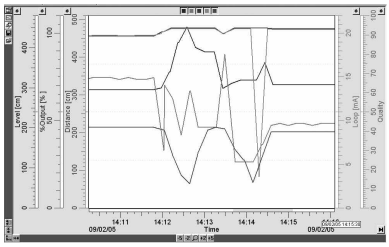

ECHO CURVE

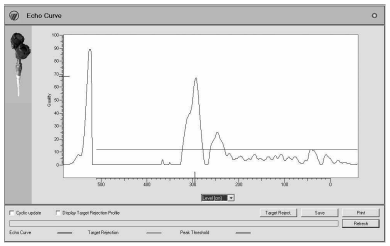

SELECTION GUIDE

Pulsar® and Eclipse® are compatible radar technoplogies, each encompassing different challenges in process level measurement. Often both technologies could be used and are subject to personal preference. However, below guideline advises to select the right equipment for the job.

Pulsar is ideally suited when

- aggressive and/or high viscous liquids
- long measuring ranges up to 20 m (65 feet)
- invasive parts could obstruct with tank internals eg. mixing blades, heating elements or any other type of mechanical obstruction.

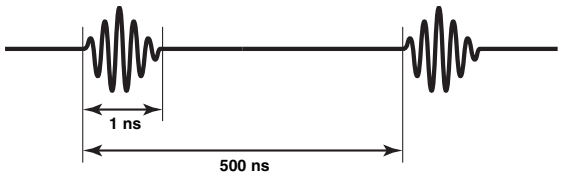

Signal processing:

Pulsar® emits short bursts of 6 GHz energy that travels trough air and reflects off the liquid. The travelling time is measured to define the level.

Eclipse is ideally suited when:

- mounting in by-pass cages, bridles or stillwells
- challenging process conditions such as heavy turbulences, dense foam, boiling or bubbling surfaces
- high temperature / high pressure applications
- low dielectric liquids under process conditions.

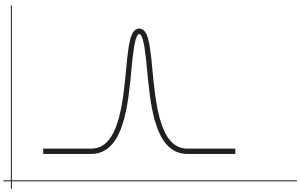

Signal processing:

Eclipse® transmits a single, sharp (fast rise-time) waveform of wide band energy that travels over a wave guide and reflects when its characteristic impedance is disturbed. The travelling time is measured to define the level.

TERMINOLOGY

The Pulsar® can measure reliably in the **measurement zone**, although that the **max 100 %** and **min 0 %** level read outs can be respectively above and below this measurement zone. The **sensor reference point** (bottom of NPT thread, top of BSP or face of flange) defines from where all configuration dimensions are entered. The value in **sensor offset** accommodates for the distance between tank height and effective process connection. By entering a **level offset**, the user can set the 0 % at the bottom of the tank in spite of an irregular bottom, heating coils etc.. Offset values are practical in use for configuring the unit based upon tank details that are available. When level approaches the **blocking distance** – this is the zone in which unreliable measurement can be expected from antenna ringing – the user can set a safety zone. When level enters the **safety zone**, an error signal (3.6 mA / 22 mA) will alarm for high level readings in critical level applications. The user can also select for **latch 3.6 mA** or **latch 22 mA**, in this case the loop current will remain blocked until manually cleared.

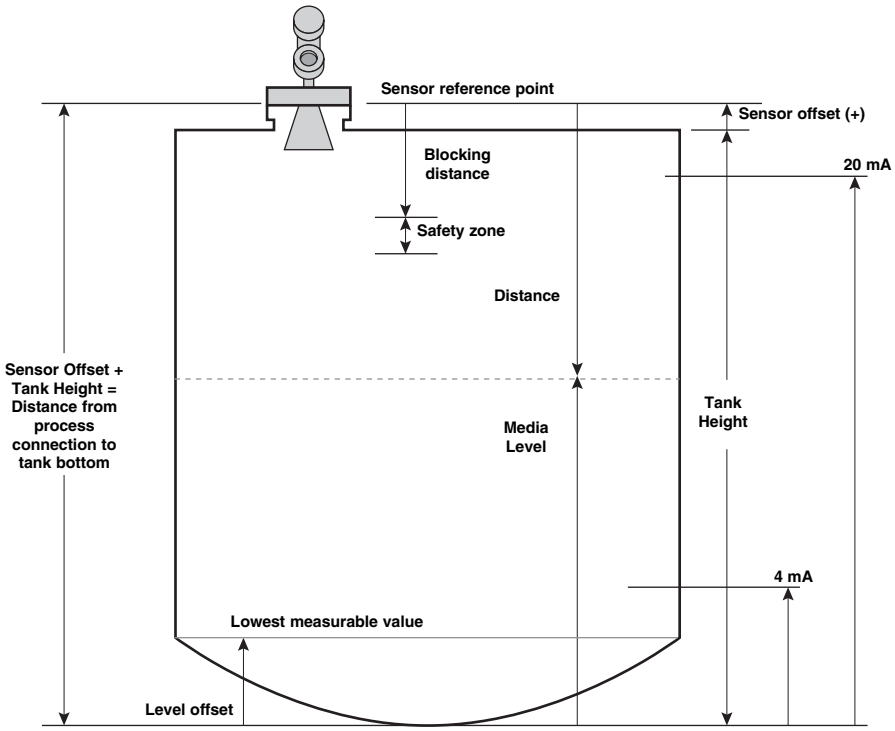

EXPEDITE SHIP PLAN (ESP)

Several Pulsar® Pulse Burst Radar Transmitters are available for quick shipment, within max. 3 weeks after factory receipt of purchase order, through the Expedite Ship Plan (ESP).
Models covered by ESP service are conveniently colour coded in the selection data charts.
To take advantage of ESP, simply match the colour coded model number codes (standard dimensions apply).
ESP service may not apply to orders of ten units or more. Contact your local representative for lead times on larger volume orders, as well as other products and options.

SELECTION DATA

A complete measuring system consists of:

1. Pulsar® transmitter head/electronics
2. Pulsar® antenna:
   For the most optimal antenna selection, check first the min. dielectric of the liquid versus the expected wave height (turbulence) to define whether the required range can be met. The less obstructions are within the beam angle, the better performance – therefore check as of next the beam angle spread of the antenna versus the obstructions in the tank. See Beam Angle and Dielectric/Turbulence/Max distance tables at the left side of the antenna order code pages. Two antenna styles exist:
   • Horn antenna – always flanged mounting, best performing configuration. Suited for standpipe / stillwell mounting.
   • Dielectric rod – threaded or flanged, most flexible mounting but less efficient
3. OPTION: Mounting flanges for threaded versions
4. Free of charge: Magnetrol master C.D. with Pulsar R05 DTM (PACT*ware*®). Order code: **090-BE59-200** (included in each order).

1. Order code for PULSAR® R05 transmitter head/electronics

BASIC MODEL NUMBER

R 0 5	5,8 GHz - 24 V DC loop powered, Pulsar® Pulse Burst radar

SIGNAL OUTPUT

5 1 0 A	4-20 mA with Hart communication and integral digital display/keypad

MOUNTING/CLASSIFICATION (consult factory for FM/CSA approvals)

1	Integral, general purpose (& I.S. FM/CSA)
A	Integral, ATEX II 1 G EEx ia IIC T4
C	Integral, ATEX II 1/2 G EEx d IIC T6

CABLE ENTRY / HOUSING MATERIAL (IP rating)

1 0	3/4" NPT, Cast aluminium dual compartment housing (IP 66)
2 0	M20 x 1,5, Cast aluminium dual compartment housing (IP 66)
3 0	3/4" NPT, Cast stainless steel dual compartment housing (IP 66)
4 0	M20 x 1,5, Cast stainless steel dual compartment housing (IP 66)

R 0 5 – 5 0 A – 0 **complete order code for PULSAR® R05 transmitter head/electronics**

DIMENSIONS in mm (inches)

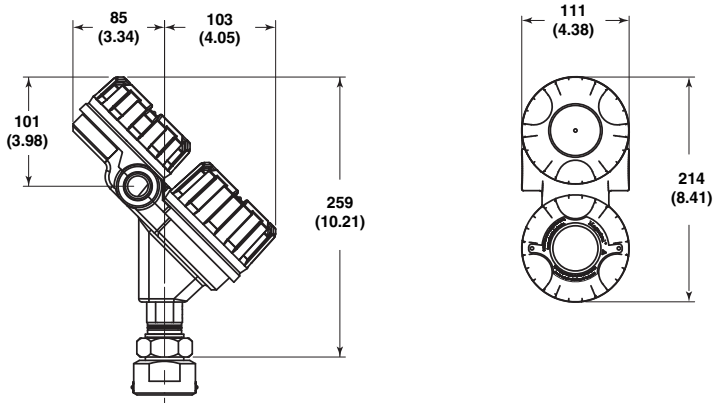

Beam Angle @-3dB - m (ft)		
D (Distance)	W (width)	
	6" Horn	4" Horn
3 (10)	0,90 (3.0)	1,40 (4.5)
6 (20)	1,80 (6.0)	2,70 (8.9)
9 (30)	2,70 (9.0)	4,10 (13.3)
12 (40)	3,70 (12.0)	5,40 (17.8)
15 (50)	4,60 (15.0)	6,80 (22.2)
18 (60)	5,50 (18.0)	8,10 (26.6)
20 (65)	6,00 (19.5)	8,80 (28.9)

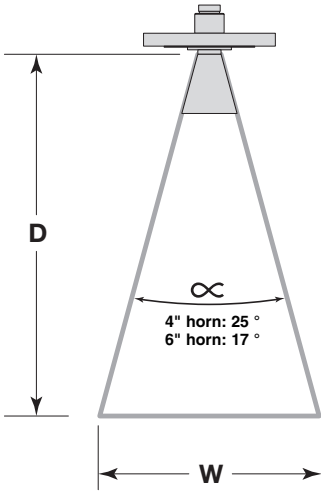

Dielectric	Turbulence, wave height in mm (inches)	Max distance in m (feet)	
		6" Horn	4" Horn
10-100	None	20,0 (65)	
	Light, < 15 (0.5)	16,0 (52)	
	Moderate, < 25 (1.0)	12,5 (41)	12,0 (39)
	Heavy, > 25 (1.0)	9,0 (29)	8,0 (27)
3-10	None	18,5 (60)	17,0 (55)
	Light, < 15 (0.5)	14,5 (48)	13,5 (44)
	Moderate, < 25 (1.0)	11,0 (37)	10,0 (33)
	Heavy, > 25 (1.0)	7,5 (25)	6,5 (22)
1,7-3,0	None	13,5 (45)	12,0 (40)
	Light, < 15 (0.5)	11,5 (37)	10,0 (33)
	Moderate, < 25 (1.0)	9,0 (29)	8,0 (26)
	Heavy, > 25 (1.0)	6,0 (20)	5,0 (17)

Nozzles

Improper installation in a nozzle creates “ringing” which will adversely affect measurement. The antenna should always be mounted so the active section of the antenna is a minimum of 13 mm (0.5") below the nozzle (be sure to include any nozzle dimension inside the vessel). Antenna extensions are offered to allow the Pulsar® transmitter to work reliably in nozzle heights of max 25 mm (1"), 100 mm (4"), 200 mm (8") or 300 mm (12").

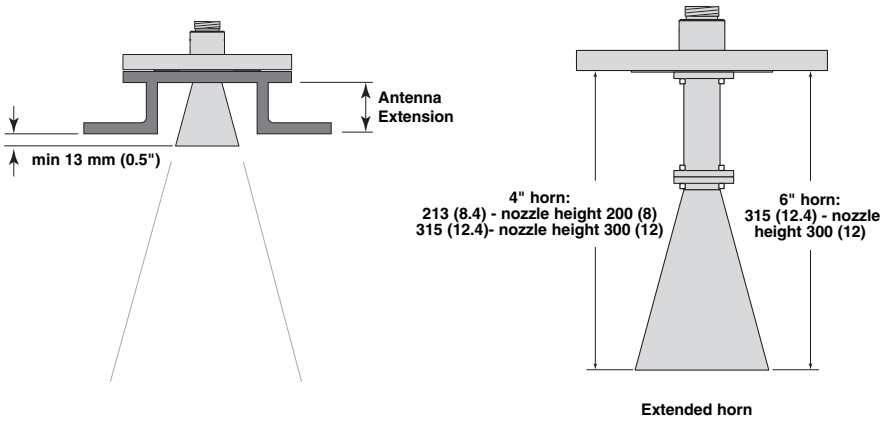

Standpipes and Stillwells

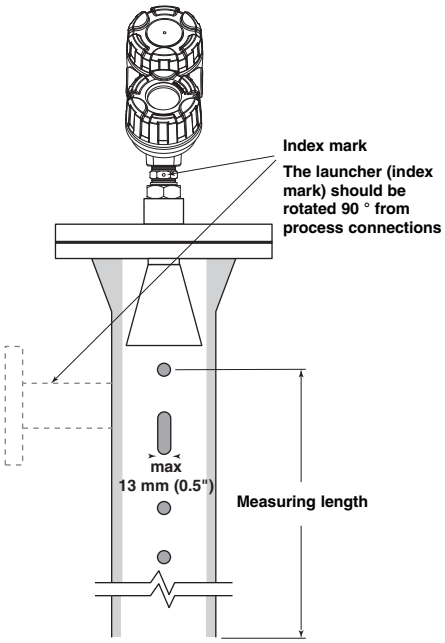

3", 4" and 6" horn antenna can be used for mounting in standpipes and stillwells. Use below table to select the right antenna for matching with the pipe size of your standpipe/stillwell.

Antenna size	Pipe size sch 40 - wall thickness of 5 mm(0.19")		max range in meters (ft)
3"	DN 80	3"	18,3 (60.0)
4"	DN 100	4"	19,1 (62.7)
		6"	19.6 (64.3)
6"	DN 150 DN 200	8"	19.8 (65.0)

2. Order code for PULSAR R05: horn antenna

BASIC MODEL NUMBER

R A 3	Pulsar 3" horn antenna - use only for mounting on standpipe/stillwell
R A 4	Pulsar 4" horn antenna
R A 6	Pulsar 6" horn antenna - use 6" / DN 150 size process connection flanges

MATERIAL OF CONSTRUCTION

A	316/316L (1.4401/1.4404) stainless steel	- All
B	Hastelloy C (2.4819)	- RA4 and RA6

PROCESS CONNECTION - SIZE/TYPE (Consult factory for larger flange sizes)

ANSI flanges

5 3	3" 150 lbs ANSI RF
5 4	3" 300 lbs ANSI RF
5 5	3" 600 lbs ANSI RF
6 3	4" 150 lbs ANSI RF
6 4	4" 300 lbs ANSI RF
6 5	4" 600 lbs ANSI RF
7 3	6" 150 lbs ANSI RF
7 4	6" 300 lbs ANSI RF
7 5	6" 600 lbs ANSI RF

EN/DIN flanges

E A	DN 80	PN 16	EN 1092-1 Type A
E B	DN 80	PN 25/40	EN 1092-1 Type A
E D	DN 80	PN 63	EN 1092-1 Type B2
F A	DN 100	PN 16	EN 1092-1 Type A
F B	DN 100	PN 25/40	EN 1092-1 Type A
F D	DN 100	PN 63	EN 1092-1 Type B2
G A	DN 150	PN 16	EN 1092-1 Type A
G B	DN 150	PN 25/40	EN 1092-1 Type A
G D	DN 150	PN 63	EN 1092-1 Type B2

PROCESS SEAL - MATERIAL (see page 12 for selection assistance)

0	Viton® GFLT seal	-40 °C (-40 °F) / +200 °C (+400 °F)
1	EPDM (Ethylene Propylene)	-50 °C (-60 °F) / +125 °C (+250 °F)
2	Kalrez 4079 seal	-40 °C (-40 °F) / +200 °C (+400 °F)
8	Simriz SZ 485 (formerly Aegis PF 128 seal)	-20 °C (-4 °F) / +200 °C (+400 °F)

ANTENNA EXTENSION

0 0 0	Only for use with 3" horn antenna	RA3
1 0 0	For nozzle height ≤ 100 mm (4")	RA4
2 0 0	For nozzle height ≤ 200 mm (8")	RA4/RA6
3 0 0	For nozzle height ≤ 300 mm (12")	RA4/RA6

R A [ ] – [ ] [ ] [ ] [ ] – [ ] 0 0 **complete order code for PULSAR® R05: horn antenna**

DIMENSIONS in mm (inches)

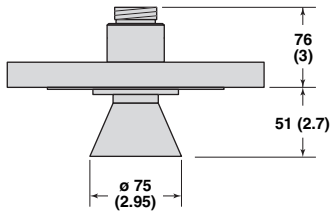

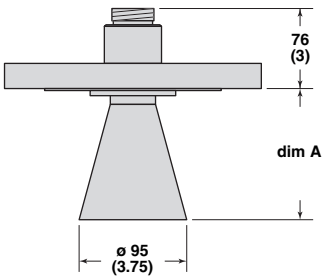

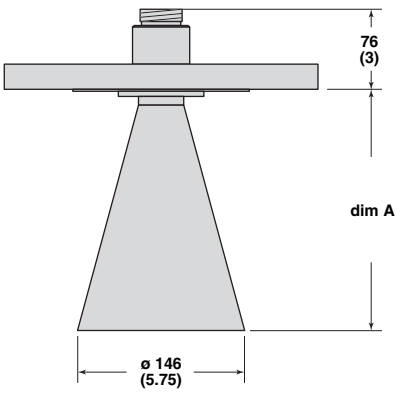

Max nozzle height	dim A
100 mm (4")	117 (4.6)
200 mm (8")	213 (8.4)
300 mm (12")	315 (12.4)

Max nozzle height	dim A
200 mm (8")	211 (8.3)
300 mm (12")	315 (12.4)

3" Horn **4" Horn** **6" Horn**

Viton® is a registered trademark of Dupont Performance Elastomers

MOUNTING DIELECTRIC ROD ANTENNA

Beam Angle @-3dB - m (ft)	
D (Distance)	W (width)
3 (10)	1,40 (4.5)
6 (20)	2,70 (8.9)
9 (30)	4,10 (13.3)
12 (40)	5,40 (17.8)
15 (50)	6,80 (22.2)
18 (60)	8,10 (26.6)
20 (65)	8,80 (28.9)

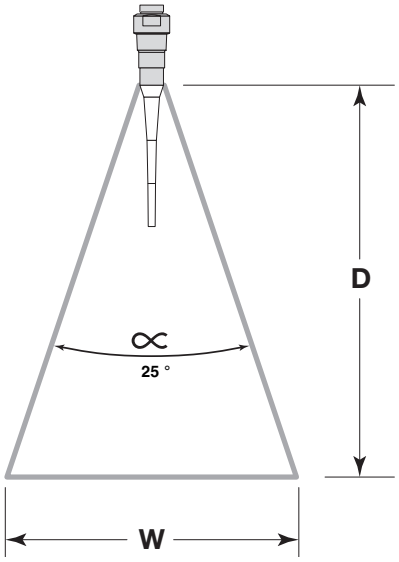

Dielectric	Turbulence, wave height in mm (inches)	Max distance in m (feet)
10-100	None	20 (65)
	Light, < 15 (0.5)	16 (52)
	Moderate, < 25 (1.0)	12 (40)
	Heavy, > 25 (1.0)	7,5 (25)
3-10	None	15 (50)
	Light, < 15 (0.5)	12 (40)
	Moderate, < 25 (1.0)	9 (30)
	Heavy, > 25 (1.0)	6 (20)
2,0-3,0	None	11 (35)
	Light, < 15 (0.5)	8,5 (28)
	Moderate, < 25 (1.0)	6,5 (21)
	Heavy, > 25 (1.0)	4,5 (15)

Nozzles

Improper installation in a nozzle creates “ringing” which will adversely affect measurement. The antenna should always be mounted so the active section of the antenna is a minimum of 13 mm (0.5") below the nozzle (be sure to include any nozzle dimension inside the vessel). Antenna extensions are offered to allow the Pulsar transmitter to work reliably in nozzle heights of max. 25 mm (1"), 100 mm (4"), 200 mm (8") or 300 mm (12"). Standard antennas are shown below for reference. (See table below).

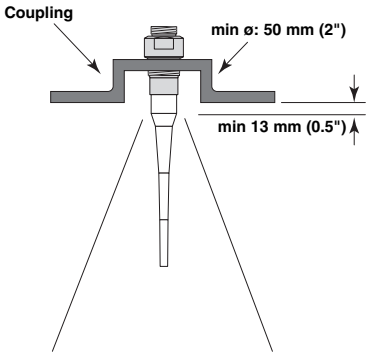

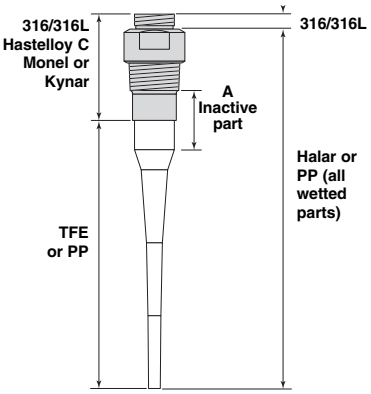

(standard antenna shown)

DIMENSIONS in mm (inches)

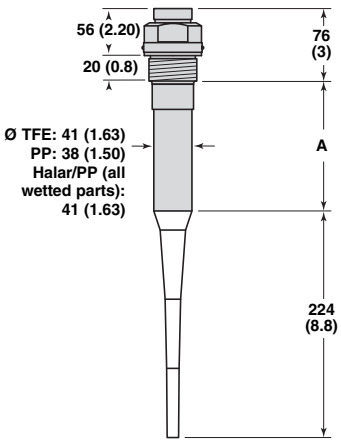

Threaded connection BSP/NPT (extended antenna shown)

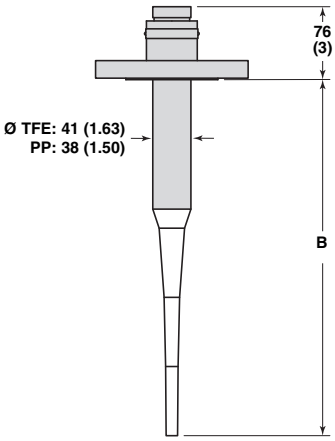

Flanged connection ANSI/DIN

Nozzle height	A (inactive part)	B (antenna extension)
25 (1)①	58 (2.3)	282 (11.1)
100 (4)	130 (5.1)	356 (14.0)
200 (8)	231 (9.1)	457 (18.0)
300 (12)	333 (13.1)	559 (22.0)

① Standard antenna with threaded connections only.

2. Order code for PULSAR® R05: dielectric rod antenna

BASIC MODEL NUMBER

R A A	Pulsar® dielectric rod antenna in TFE (Teflon®)
R A B	Pulsar® dielectric rod antenna in PP (Polypropylene)
R A C	Pulsar® dielectric rod antenna in Halar®

MATERIAL OF CONSTRUCTION

A	316/316L (1.4401/1.4404) stainless steel inactive part with TFE or PP antenna (RAA & RAB)
B	Hastelloy C (2.4819) inactive part with TFE antenna (RAA)
C	Monel (2.4360) inactive part with TFE antenna (RAA)
G	All-plastic antenna (RAB and RAC)

PROCESS CONNECTION - SIZE/TYPE

Threaded

3 1	1½" NPT thread	min nozzle Ø: 50 mm (2")
3 2	1½" BSP (G1½) thread	min nozzle Ø: 50 mm (2")

ANSI flanges ①

4 3	2" 150 lbs ANSI RF
4 4	2" 300 lbs ANSI RF
4 5	2" 600 lbs ANSI RF
5 3	3" 150 lbs ANSI RF
5 4	3" 300 lbs ANSI RF
5 5	3" 600 lbs ANSI RF
6 3	4" 150 lbs ANSI RF
6 4	4" 300 lbs ANSI RF
6 5	4" 600 lbs ANSI RF
7 3	6" 150 lbs ANSI RF②
7 4	6" 300 lbs ANSI RF②
7 5	6" 600 lbs ANSI RF②

EN/DIN flanges ①

D A	DN 50	PN 16	EN 1092-1 Type A
D B	DN 50	PN 25/40	EN 1092-1 Type A
D D	DN 50	PN 63	EN 1092-1 Type B2
E A	DN 80	PN 16	EN 1092-1 Type A
E B	DN 80	PN 25/40	EN 1092-1 Type A
E D	DN 80	PN 63	EN 1092-1 Type B2
F A	DN 100	PN 16	EN 1092-1 Type A
F B	DN 100	PN 25/40	EN 1092-1 Type A
F D	DN 100	PN 63	EN 1092-1 Type B2
G A	DN 150	PN 16	EN 1092-1 Type A②
G B	DN 150	PN 25/40	EN 1092-1 Type A②
G D	DN 150	PN 63	EN 1092-1 Type B2②

Sanitary 316/316L (1.4401/1.4404) connections – use only material of construction code A

4 P	2" Triclover, 16 AMP
5 P	3" Triclover, 16 AMP
6 P	4" Triclover, 16 AMP
7 P	6" Triclover, 16 AMP

① Metal flanges welded to antenna
② Not available with plastic facing for RAB-G and RAC-G

PROCESS SEAL - MATERIAL (see page 12 for selection assistance)

0	Viton® GFLT seal	-40 °C (-40 °F) / +200 °C (+400 °F)
1	EPDM (Ethylene Propylene)③	-50 °C (-60 °F) / +125 °C (+250 °F)
2	Kalrez 4079 seal③	-40 °C (-40 °F) / +200 °C (+400 °F)
8	Simriz SZ 485 (formerly Aegis PF 128 seal)③	-20 °C (-4 °F) / +200 °C (+400 °F)

③ Not with all-plastic antenna (RAB-G and RAC-G)

ANTENNA EXTENSION

0 0 0	For nozzle height < 25 mm (1") - always threaded process connection
1 0 0	For nozzle height < 100 mm (4")
2 0 0	For nozzle height < 200 mm (8") (ESP for RAA only)
3 0 0	For nozzle height < 300 mm (12")

R A ☐ – ☐ ☐ ☐ ☐ – ☐ 0 0 **complete order code for PULSAR® R05: dielectric rod antenna**

Viton® is a registered trademark of Dupont Performance Elastomers

3. Mounting flanges for 1 1/2" NPT threaded versions - ANSI RF (metal) /ANSI FF (plastic)

Part Number: 004-6852	2"		3"		4"		6"	
	150#	300#	150#	300#	150#	300#	150#	300#
316/316L SST	-001	-005	-002	-006	-003	-007	-004	-008
304/304L SST	-009	-013	-010	-014	-011	-015	-012	-016
Carbon steel	-017	-021	-018	-022	-019	-023	-020	-024
Hastelloy C	-025	-029	-026	-030	-027	-031	-028	-032
Monel	-033	-037	-034	-038	-035	-039	-036	-040
Kynar	-041	-045	-042	-046	-043	-047	-044	-048
PVC	-049	-053	-050	-054	-051	-055	-052	-056
Polypropylene	-057	-061	-058	-062	-059	-063	-060	-064
TFE	-065	-069	-066	-070	-067	-071	-068	-072

PROCESS SEAL MATERIAL

Material	Code	Maximum Temperature	Maximum Pressure	Min. Temp.	Recommended For Use In	Not Recommended For Use In
Viton® GFLT	0	+200 °C @ 16 bar (+400 °F @ 232 psig)	50 bar @ +20 °C (750 psig @ +70 °F)	-40 °C (-40 °F)	General purpose, steam, ethylene	Ketones (MEK, acetone), skydrol fluids, amines, anhydrous ammonia, low molecular weight esters and ethers, hot hydrofluoric or chlorosuforic acids, sour HCs
EPDM	1	+125 °C @ 14 bar (+250 °F @ 200 psig)	50 bar @ +20 °C (750 psig @ +70 °F)	-50 °C (-60 °F)	Acetone, MEK, skydrol fluids	Petroleum oils, di-ester base lubricants, propane, steam
Simriz SZ 485 (formerly Aegis PF128)	8	+200 °C @ 16 bar (+400 °F @ 232 psig)	50 bar @ +20 °C (750 psig @ +70 °F)	-20 °C (-4 °F)	Inorganic and organic acids (including HF and nitric), aldehydes, ethylene, glycols, organic oils, silicone oils, vinegar, sour HCs, steam, amines, ethylene oxide, propylene oxide	Black liquor, Freon 43, Freon 75, Galden, KEL-F liquid, molten sodium, molten potassium
Kalrez (4079)	2	+200 °C @ 16 bar (+400 °F @ 232 psig)	50 bar @ +20 °C (750 psig @ +70 °F)	-40 °C (-40 °F)	Inorganic and organic acids (including HF and nitric), aldehydes, ethylene, glycols, organic oils, silicone oils, vinegar, sour HCs	Black liquor, hot water/steam, hot aliphatic amines, ethylene oxide, propylene oxide, molten sodium, molten potassium

Viton® is a registered trademark of Dupont Performance Elastomers

TRANSMITTER SPECIFICATIONS

FUNCTIONAL/PHYSICAL

Description		*Specification*
Operating frequency (approvals)		5,8 GHz (Europe - RTTE), 6,3 GHz (U.S.A. - FCC / Canada - Ic)
Power (at terminals)		General Purpose / ATEX Explosion Proof (with Intrinsically Safe electronics) 16 to 36 V DC ATEX Intrinsically Safe: 16 to 28,6 V DC
Signal Output		4-20 mA with HART® - version 5 compatible 3,8 to 20,5 mA useable (meets NAMUR NE 43)
Span		0,2 to 20 m (0.5 to 65 ft)
Resolution		Analog: 0,01 mA Display: 0,1 cm (inch)
Loop Resistance (see tables at page 12)		400 Ω @ 24 V DC / 20 mA
Damping		Adjustable 0-45 s
Diagnostic Alarm		Adjustable 3,6 mA, 22 mA or HOLD
User Interface	Local	3-button keypad – 2-line x 8-character LCD
	H.H.U.	HART® communicator (version 5.x)
	PC/Laptop	AMS® or PACT*ware*™ – for more info: ask for bulletin 59-101
Display		2-line x 8-character LCD
Menu Language		English/Spanish/French/German – selectable via menu configuration
Housing Material		IP 66/Aluminium A356T6 (< 0.20 % copper) or stainless steel
Approvals		ATEX II 1G EEx ia II C T4, ATEX II 1/2G EEx d II C T6, FM and CSA Non Incendive, I.S. and XP LRS – Lloyds Register of Shipment (marine applications)
SIL (Safety Integrity Level)		Functional safety to SIL1/SIL2 (redundant installation) in accordance to IEC 61508 SFF of 73,7 % - full FMEDA report available
Electrical Data		Ui = 28,4 V, Ii = 94 mA, Pi = 0,67 W
Equivalent Data		Ci = 2,2 nF, Li = 430 µH
Shock/Vibration Class		ANSI/ISA-S71.03 SA1 (Shock), ANSI/ISA-S71.03 VC2 (Vibration)
Net and Gross Weight – amplifier		2,40 kg net; 2,80 kg gross (Aluminium) – 5,30 kg net; 5,7 kg gross (SST)
Gross Weight – antenna		4" - 150 lbs horn antenna: 8,30 kg Std. dielectric rod antenna: 0,90 kg

PERFORMANCE

Description	*Specification*
Reference Conditions	Reflection from ideal reflector, at +20 °C (70 °F)
Linearity	± 1 cm (0,4") or 0,1 % of tank height (whichever is greater)
Accuracy	± 1 cm (0,4") or 0,1 % of tank height (whichever is greater) (performance will degrade slightly within 1,5 m (60") of antenna)
Sensitivity	± 2,5 mm (0.1")
Repeatability	± 5 mm (0,2") or 0,05 % of tank height (whichever is greater)
Max fill/drain rate	4,5 m/min (180 inch/min)
Response Time	< 1 second
Warm-up Time	30 seconds
Ambient Temp.	-40 °C to +80 °C (-40 °F to +175 °F) - operating temperature -40 °C to +70 °C (-40 °F to +160 °F) - ATEX Exd -20 °C to +70 °C (-5 °F to +160 °F) - with display function
Process dielectric effect	< 7,5 mm (0.3") within selected range
Ambient temp. effect	0,05 % of tank height per 10 °C
Humidity	0-99 %, non-condensing
Electromagnetic Compatibility	Meets CE requirements (EN-61326)

ELECTRICAL WIRING

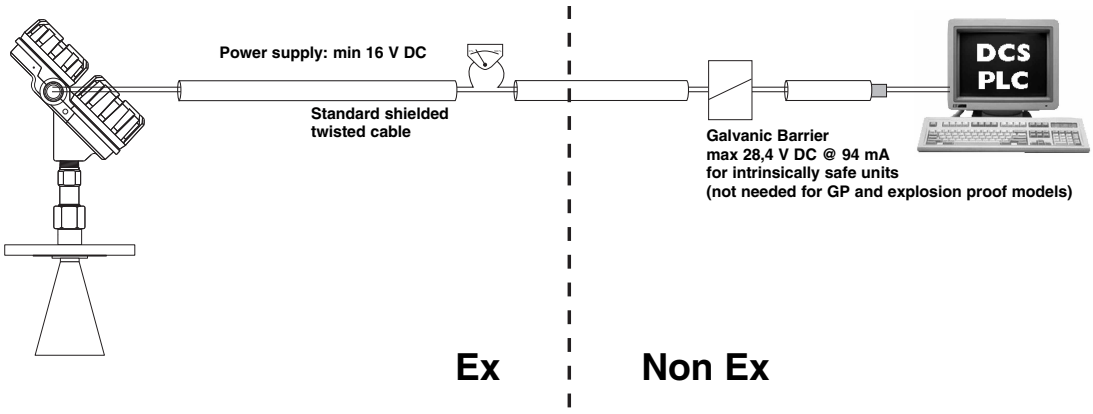

Description		*3"/4"/6" Horn antenna*
Materials	Antenna	TFE (Teflon)
	Horn	316/316L (1.4401/1.4404), Hastelloy C (2.4819)
	Process seal	Viton® GFLT, EPDM, Kalrez 4079 or Simriz SZ 485 (formerly Aegis PF 128)
Horn diameter	3"	75 mm (2.95")
	4"	95 mm (3.75")
	6"	146 mm (5.75")
Mounting		See mounting considerations on page 2 (use Eclipse® 705 for mounting in external cages or stillwells)
Process Connection		Flanged: Various ANSI or DIN flanges
Blocking distance ①		min 50 mm (2") below horn
Max Process Temp.		+200 °C @ 3,5 bar (+400 °F @ 50 psi)
Max Process Pressure		46,5 bar @ +20 °C (675 psi @ +70 °F) - see table at page 12
Vacuum service		Up to full vacuum
Beam angle - see page 8	3"	strictly for use in stillwell/standpipe
	4"	25 °
	6"	17 °
Dielectric Range		1,7 to 100

Description		*TFE (Teflon®) dielectric rod*	*PP (Polypropylene®) dielectric rod*
Materials	Antenna	TFE (Teflon)	PP (Polypropylene)
	Process seal	Viton® GFLT, EPDM, Kalrez 4079 or Simriz SZ 485 (formerly Aegis PF 128)	Viton® "O"ring
	Mounting connection	316/316L (1.4401/1.4404), Hastelloy C (2.4819), Monel (2.4360) or PP (Polypropylene)	316/316L (1.4401/1.4404)
Mounting		See mounting considerations on page 2 (use Eclipse® 705 for mounting in external cages or stillwells)	
Process Connection		1½" NPT/BSP (G1½) Flanged: Various ANSI or EN/DIN flanges	
Blocking distance ①		min 50 mm (2") below rod	
Max Process Temp.		+200 °C @ 3,5 bar (+400 °F @ 50 psi)	+95 °C @ 3,5 bar (+200 °F @ 50 psi)
Max Process Pressure - see table at page 12		46,5 bar @ +20 °C (675 psi @ +70 °F)	52 bar @ +20 °C (750 psi @ +70 °F)
Vacuum service		Up to full vacuum	
Beam angle - see table at page 6		25 °	
Dielectric Range		2,0 to 100	

Description		*All-Polypropylene®*	*All-Halar®*
Materials	Antenna	PP (Polypropylene)	Halar®
	Process seal	Viton® "O"ring	
	Mounting connection	PP (Polypropylene)	Halar®
Mounting		See mounting considerations on page 2 and 3 (recommended to use Eclipse® 705 for mounting in external cages or stillwells)	
Process Connection		1½" NPT/BSP (G1½) Flanged: Various ANSI or EN/DIN flanges	
Blocking distance ①		min 50 mm (2") below rod	
Max Process Temp.		+95 °C @ 3,5 bar (+200 °F @ 50 psi)	+150 °C (+300 °F) @ atmosph.
Max Process Pressure - see table at page 12		Flanged: 14 bar @ +20 °C (200 psi @ + 70 °F) Threaded: 3,5 bar @ +20 °C (50 psi @ + 70 °F)	
Vacuum service		Up to full vacuum	
Beam angle - see table at page 6		25 °	
Dielectric Range		2,0 to 100	

① Blocking distance = zone at the top in which level measurement is unreliable.

Viton® is a registered trademark of Dupont Performance Elastomers

TEMPERATURE-PRESSURE RATING

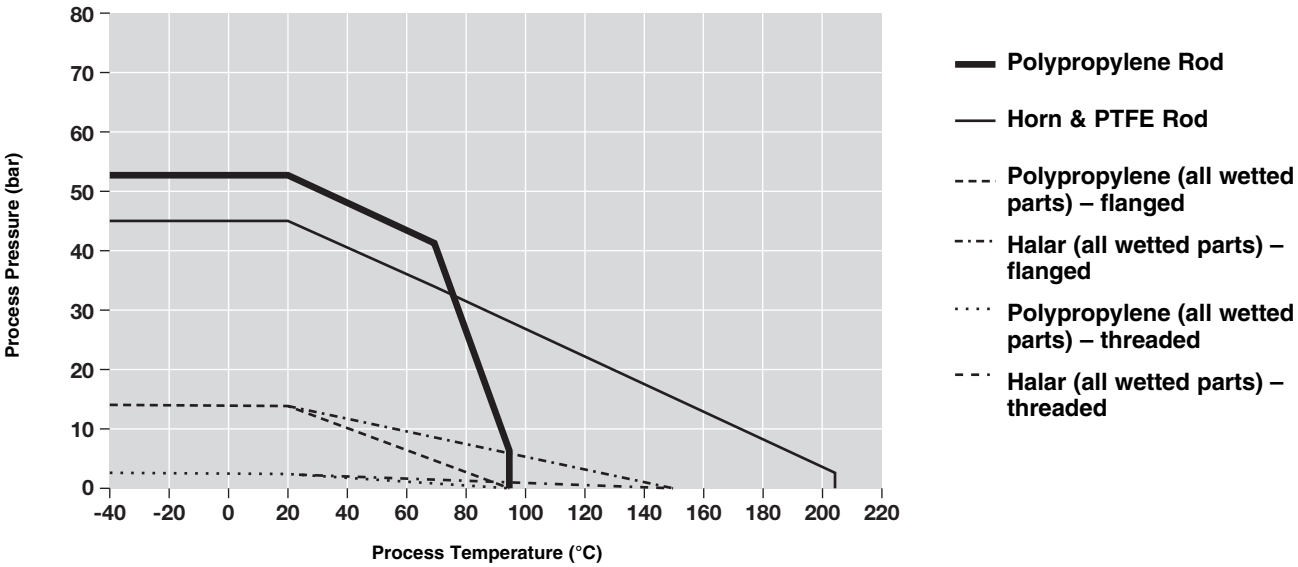

LOOP RESISTANCE

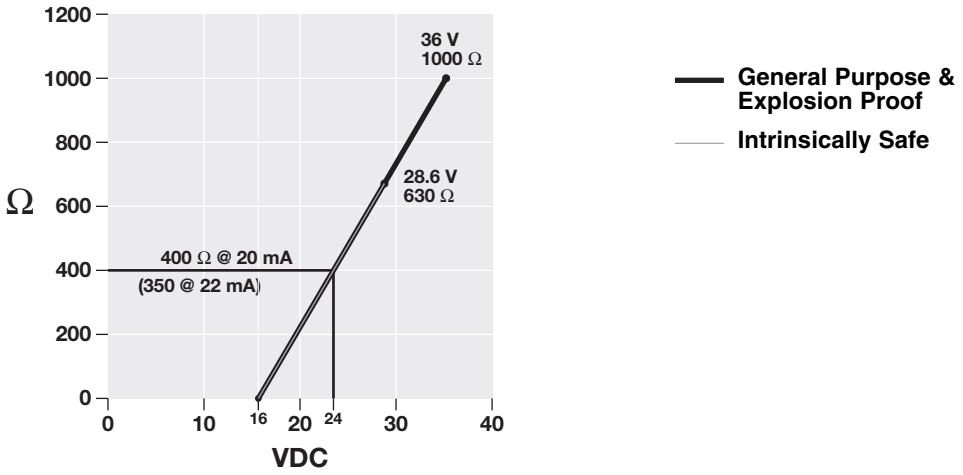

QUALITY ASSURANCE - ISO 9001:2000

THE QUALITY ASSURANCE SYSTEM IN PLACE AT MAGNETROL GUARANTEES THE HIGHEST LEVEL OF QUALITY DURING THE DESIGN, THE CONSTRUCTION AND THE SERVICE OF CONTROLS.
OUR QUALITY ASSURANCE SYSTEM IS APPROVED AND CERTIFIED TO **ISO 9001:2000** AND OUR TOTAL COMPANY IS COMMITTED TO PROVIDING FULL CUSTOMER SATISFACTION BOTH IN QUALITY PRODUCTS AND QUALITY SERVICE.

DNV
Accredited by the RvA
ISO-9001:2000 REGISTERED FIRM
DNV Certification B.V., THE NETHERLANDS

PRODUCT WARRANTY

ALL MAGNETROL ELECTRONIC AND ULTRASONIC LEVEL CONTROLS ARE WARRANTED FREE OF DEFECTS IN MATERIALS AND WORKMANSHIP FOR ONE FULL YEAR FROM THE DATE OF ORIGINAL FACTORY SHIPMENT. IF RETURNED WITHIN THE WARRANTY PERIOD; AND, UPON FACTORY INSPECTION OF THE CONTROL, THE CAUSE OF THE CLAIM IS DETERMINED TO BE COVERED UNDER THE WARRANTY; THEN, MAGNETROL INTERNATIONAL WILL REPAIR OR REPLACE THE CONTROL AT NO COST TO THE PURCHASER (OR OWNER) OTHER THAN TRANSPORTATION.
MAGNETROL SHALL NOT BE LIABLE FOR MISAPPLICATION, LABOR CLAIMS, DIRECT OR CONSEQUENTIAL DAMAGE OR EXPENSE ARISING FROM THE INSTALLATION OR USE OF THE EQUIPMENT. THERE ARE NO OTHER WARRANTIES EXPRESSED OR IMPLIED, EXCEPT, SPECIAL WRITTEN WARRANTIES COVERING SOME MAGNETROL PRODUCTS.

Magnetrol

BULLETIN N°: BE 58-101.2
EFFECTIVE: JUNE 2007
SUPERSEDES: June 2005

UNDER RESERVE OF MODIFICATIONS

BENELUX	Heikensstraat 6, 9240 Zele, België Tel. +32 (0)52.45.11.11 • Fax. +32 (0)52.45.09.93 • E-Mail: info@magnetrol.be
DEUTSCHLAND	Alte Ziegelei 2-4, D-51491 Overath Tel. 02204 / 9536-0 • Fax. 02204 / 9536-53 • E-Mail: vertrieb@magnetrol.de
FRANCE	40 - 42, rue Gabriel Péri, 95130 Le Plessis Bouchard Tél. 01.34.44.26.10 • Fax. 01.34.44.26.06 • E-Mail: magnetrolfrance@magnetrol.fr
ITALIA	Via Arese 12, I-20159 Milano Tel. (02) 607.22.98 (R.A.) • Fax. (02) 668.66.52 • E-Mail: mit.gen@magnetrol.it
UNITED KINGDOM	Unit 1 Regent Business Centre, Jubilee Road Burgess Hill West Sussex RH 15 9TL Tel. (01444) 871313 • Fax (01444) 871317 • E-Mail: sales@magnetrol.co.uk
INDIA	C-20 Community Centre, Janakpuri, New Delhi - 110 0058 Tel. 91 (11) 41661840 • Fax 91 (11) 41661843 • E-Mail: info@magnetrolindia.com

www.magnetrol.com

OUR NEAREST REPRESENTATIVE